YAMAHA

PARTS CATALOGUE

YFM7FGPX (3B4M) U.S.A.
YFM7FGPX (3B4N) CANADA
YFM7FGPX (3B4P) EUROPE
YFM7FGPX (3B4R) OCEANIA

1G3B4-100EK

(2G3B4-100EK)

YAMAHA GENUINE Parts & Accessories

2009/5/20

NEWS NO.	DATE	COMMENT
PE0-MC-080028	May,23,2008	FIG.10:THROTTLE BODY ASSY 1 LIST/ILLUST CORRECTION
PE0-MC-080025	May,22,2008	FIG.23 SIDE COVER ILLUSTRATION CORRECTION
PE0-MC-080037	June,30,2008	FIG.35/36 REAR WHEEL LIST CORRECTION
PE0-MC-080086	Nov.,14,2008	FIG.33,36 ILLUSTRATION CORRECTION
PE0-MC-090023	Apr.,28,2009	FIG.16 TRANSMISSION LIST/ILLUST. REVISION

2014/6/9

NEWS NO.	DATE	COMMENT
PE0-MC-100067	Feb.,16,2012	COR:FIG.27 FRONT DIFFERENTIAL LIST/ILLUST. CORRECTION
PE0-MC-120082	Sep.,21,2012	COR:YFM700(3B4/5C0) FIG.30 FUEL TANK ILLUST, CORRECTION
PE0-MC-120103	Oct.,24,2012	COR:YFM700,YXR700(3B4/43P/5C0,5B4/42S) CLUTCH LIST CORRECTION
PE0-MC-140013	Apr.,7,2014	COR:YFM700(3B4) FIG.29 FRONT SUSPENSION & WHEEL LIST/ILLUST. CORRECTION
PE0-MC-140024	Jun.,3,2014	COR:YFM700/550(3B4,43P,5C0,34D,28P)FIG.39,40 LIST/ILLUST. CORRECTION

YFM7FGPX
PARTS CATALOGUE
©2007 by Yamaha Motor Co., Ltd.
1st edition, July 2007
All rights reserved.
Any reprinting or unauthorized use
without the written permission of
Yamaha Motor Co., Ltd.
is expressly prohibited.

A3

FOREWORD

This Parts Catalogue is related to the parts for the model(s) on the cover page. When you are ordering replacement parts, please refer to this Parts Catalogue and quote both part numbers and part names correctly.

1. Modifications or additions which have been made after the issue of the Parts Catalogue will be announced in the Parts News.
   It is advisable that you make the necessary corrections to the Parts Catalogue according to the Parts News.

2. Abbreviations
   The following abbreviations are used in this Parts Catalogue.

   “UR” Use specified parts number.
   “UN” Use as many as needed.
   “AP” Alternate Parts
   “LM” Locally Made (Parts need to be ordered locally)
   “F#” Frame No. (Applicable machine No.)
   “O/S” Over Size

3. The number of components for assembly
   - Parts, which are to be supplied in an assembly, are listed with a dot (.) in front of the part name as shown below.
   - The numeral appearing to the right of each component part indicates the quantity of parts for each assembly unit.

PART NO.	DESCRIPTION	Q’TY	REMARKS
2F5–83310–60	FRONT FLASHER LIGHT ASSY	2	
115–83311–60	.BULB (6V–18W)	1	

4. Applicable colours of graphics are represented in the “REMARKS” as shown below.

PART NO.	DESCRIPTION	Q’TY	REMARKS
2N4–24110–00–X5	FUEL TANK COMP.	2	MXR
3J1–24240–10	.GRAPHIC, FUEL TANK	1	FOR MXR

5. Note that the illustrations for reference in finding parts numbers are not to be used for assembling. When assembling, please use the applicable service manual.

6. The asterisk (*) before a reference number indicates modified items after the first edition.

7. Applicable Serial No.

Engine Serial No.

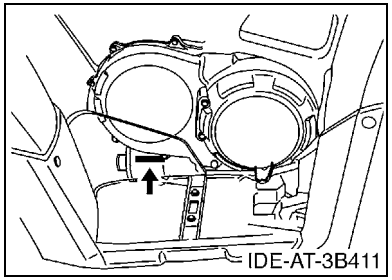

Frame Serial No.

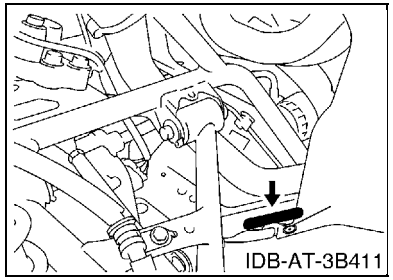

8. Applicable Colour Code (The (*) mark shows Model colour.)

Abbreviation	Colour Name	Colour Code
YB(*)	YAMAHA BLACK	0033

9. Quantity Column Information

Column No.	Name Of Q'ty Column	Destination
1	USA	U.S.A.
2	CAN	CANADA
3	EUR	EUROPE
4	OCE	OCEANIA

MODEL LABEL

(1) A label called “Model Label” is affixed in the location as indicated in (3) below.
When using this parts catalogue, please be sure to cross–reference the “model code – production code No.” in the catalogue with the “model code – production code No.” indicated on the Model Label affixed onto the product concerned.

(2) “Model Label” Indication

a	b
○ xxxx –	xxx
● x [c]	

a: Model Type Code
b: Production Code No.
c: Colouring Type

○ 4TW1–010
● A

(3) Model Label Affixing Location

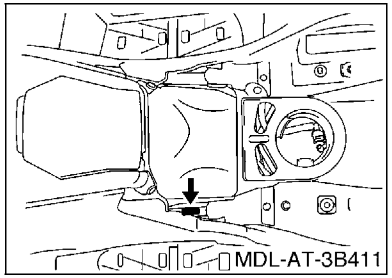

(4) Colouring Information

Model Code	Colouring Type Code	Colour Code	Colour Name	Abbreviation
3B4M	A	0033	YAMAHA BLACK	YB
3B4N	A	0033	YAMAHA BLACK	YB
3B4P	A	0033	YAMAHA BLACK	YB
3B4R	A	0033	YAMAHA BLACK	YB

(5) Model Code – Production Code Number of Model Listed in This Parts Catalogue

Model Code	Production Code No.	Country (destination)
3B4M	010	U.S.A.
3B4N	010	CANADA
3B4P	010	EUROPE
3B4R	010	AUSTRALIA
		NEW ZEALAND

Model Code	Production Code No.	Country (destination)

CONTENTS

ENGINE

CYLINDER HEAD B2
CYLINDER B3
CRANKSHAFT & PISTON B4
VALVE B6
CAMSHAFT & CHAIN B7
WATER PUMP B8
RADIATOR & HOSE B9
OIL PUMP B10
INTAKE B11
THROTTLE BODY ASSY 1 ..... B12
EXHAUST B13
CRANKCASE B15
CRANKCASE COVER 1 ..... C2
STARTER CLUTCH C4
CLUTCH C5
TRANSMISSION C7
MIDDLE DRIVE GEAR C9
SHIFT CAM & FORK C11
SHIFT SHAFT C13

CHASSIS

FRAME C15
FRONT FENDER D3
REAR FENDER D6
SIDE COVER D7
REAR ARM D9
REAR SUSPENSION D11
DRIVE SHAFT D12
FRONT DIFFERENTIAL D15
STEERING E3
FRONT SUSPENSION & WHEEL E5
FUEL TANK E7
SEAT E9
FRONT WHEEL E10
FRONT WHEEL 2 ..... E12
FRONT BRAKE CALIPER E14
REAR WHEEL F2
REAR WHEEL 2 ..... F4
REAR BRAKE CALIPER F6
STEERING HANDLE & CABLE F8
FRONT MASTER CYLINDER F10
REAR MASTER CYLINDER F11
STAND & FOOTREST F13
GUARD F14
GENERATOR F15
STARTING MOTOR G2
METER G3
HEADLIGHT G4
TAILLIGHT G5
TAILLIGHT 2 ..... G6
ELECTRICAL 1 ..... G7
ELECTRICAL 2 ..... G10
GRAPHICS G11
EMBLEM & LABEL 1 ..... G12
EMBLEM & LABEL 2 ..... G13
EMBLEM & LABEL 3 ..... G14
EMBLEM & LABEL 4 ..... G15

INDEX

NUMERICAL INDEX M1

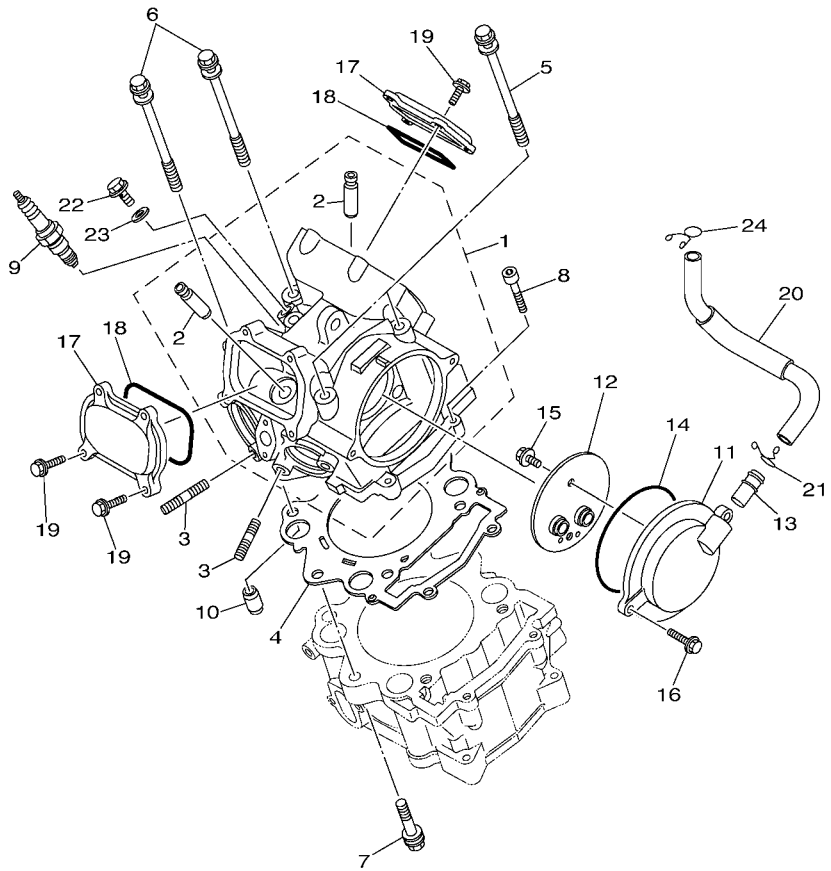

3B49100-G010

FIG. 1 CYLINDER HEAD

REF. NO.	PART NO.	DESCRIPTION	USA	CAN	EUR	OCE		REMARKS
1	3B4–11101–00	CYLINDER HEAD ASSY	1	1	1	1		
2	4G0–11133–11	.GUIDE, VALVE 1	4	4	4	4		
3	95612–08625	BOLT, STUD	4	4	4	4		
4	3B4–11181–00	GASKET, CYLINDER HEAD 1	1	1	1	1		
5	90109–09003	BOLT	2	2	2	2		
6	90109–09002	BOLT	2	2	2	2		
7	90109–09005	BOLT	2	2	2	2		
8	91312–06030	BOLT	2	2	2	2		
9	94701–00420	PLUG, SPARK (NGK CPR7EA)	1	1	1	1		
10	93612–16254	PIN, DOWEL	2	2	2	2		
11	3B4–11185–00	COVER, CYLINDER HEAD SIDE 1	1	1	1	1		
12	3B4–11165–00	PLATE, BREATHER	1	1	1	1		
13	371–11167–01	PIPE, BREATHER 2	1	1	1	1		
14	93210–96601	O-RING	1	1	1	1		
15	95022–06012	BOLT, FLANGE	2	2	2	2		
16	95022–06020	BOLT, FLANGE	2	2	2	2		
17	1S3–11186–00	COVER, CYLINDER HEAD SIDE 2	2	2	2	2		
18	93210–78544	O-RING	2	2	2	2		
19	95022–06020	BOLT, FLANGE	8	8	8	8		
20	3B4–11166–01	PIPE, BREATHER 1	1	1	1	1		
21	90467–140A4	CLIP	1	1	1	1		
22	90401–08004	BOLT, UNION	1	1	1	1		
23	90430–08119	GASKET	1	1	1	1		
24	90467–150A2	CLIP	1	1	1	1		

FIG. 2 CYLINDER

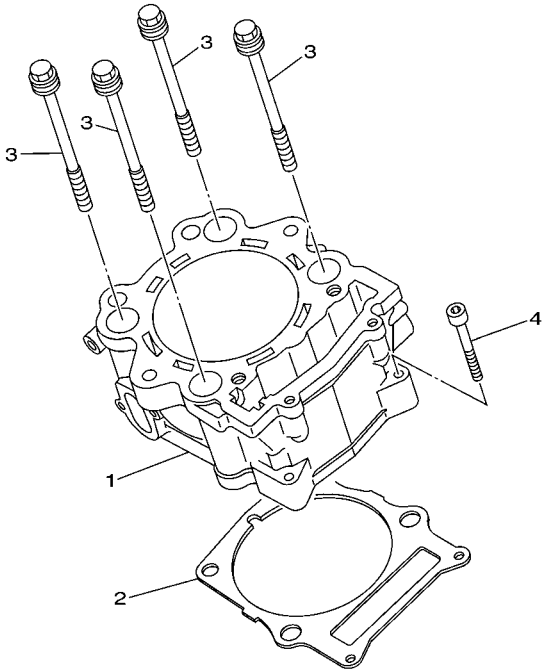

3B41100-F020

REF. NO.	PART NO.	DESCRIPTION	USA	CAN	EUR	OCE		REMARKS
1	3B4–11311–10	CYLINDER 1	1	1	1	1		
2	1S3–11351–00	GASKET, CYLINDER	1	1	1	1		
3	90119–10023	BOLT, WITH WASHER	4	4	4	4		
4	91312–06040	BOLT	2	2	2	2		

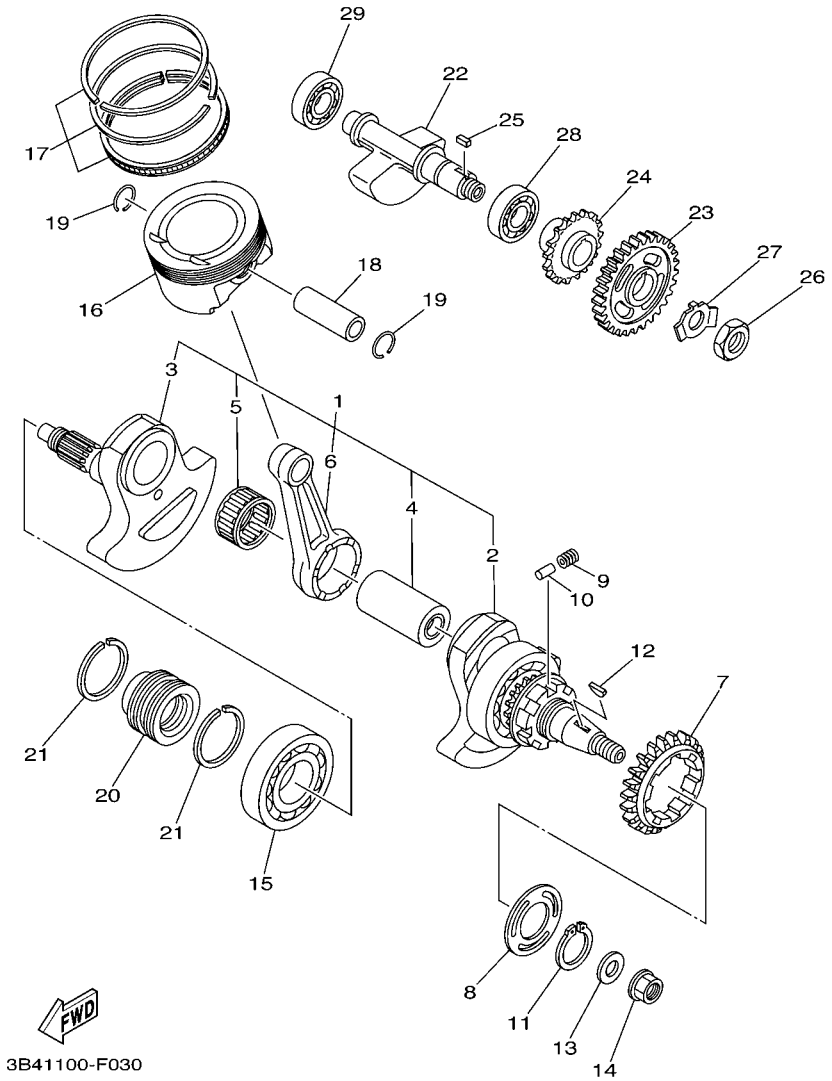

FIG. 3 CRANKSHAFT & PISTON

REF. NO.	PART NO.	DESCRIPTION	USA	CAN	EUR	OCE		REMARKS
1	3B4–11400–00	CRANKSHAFT ASSY	1	1	1	1		
2	3B4–11401–09	.CRANK SUB ASSY 1	1	1	1	1		
3	3B4–11402–09	.CRANK SUB ASSY 2	1	1	1	1		
4	1S3–11681–00	.PIN, CRANK 1	1	1	1	1		
5	93310–84017	.BEARING	1	1	1	1		
6	1S3–11651–00	.ROD, CONNECTING	1	1	1	1		
7	5KM–11536–10	GEAR, DRIVE (46T)	1	1	1	1		
8	5KM–11565–00	WASHER, BEARING COVER	1	1	1	1		
9	90501–220A1	SPRING, COMPRESSION	8	8	8	8		
10	93606–09002	PIN, DOWEL	4	4	4	4		
11	99009–35400	CIRCLIP	1	1	1	1		
12	90280–05001	KEY, WOODRUFF	1	1	1	1		
13	90201–165H4	WASHER, PLATE	1	1	1	1		
14	90179–16004	NUT	1	1	1	1		
15	93306–30810	BEARING	1	1	1	1		
16	1S3–11631–10	PISTON (STD)	1	1	1	1		
17	1S3–11603–10	PISTON RING SET (STD)	1	1	1	1		
18	5VK–11633–00	PIN, PISTON	1	1	1	1		
19	93450–24154	CIRCLIP	2	2	2	2		
20	3B4–16181–00	SPACER 1	1	1	1	1		
21	3B4–11447–00	SEAL, CRANK	2	2	2	2		
22	3B4–11454–00	WEIGHT 1	1	1	1	1		
23	3B4–11531–00	GEAR, BALANCE WEIGHT	1	1	1	1		
24	3B4–13354–00	SPROCKET, DRIVE	1	1	1	1		
25	90282–05007	KEY, STRAIGHT	1	1	1	1		
26	90170–18003	NUT	1	1	1	1		
27	90215–18001	WASHER, LOCK	1	1	1	1		

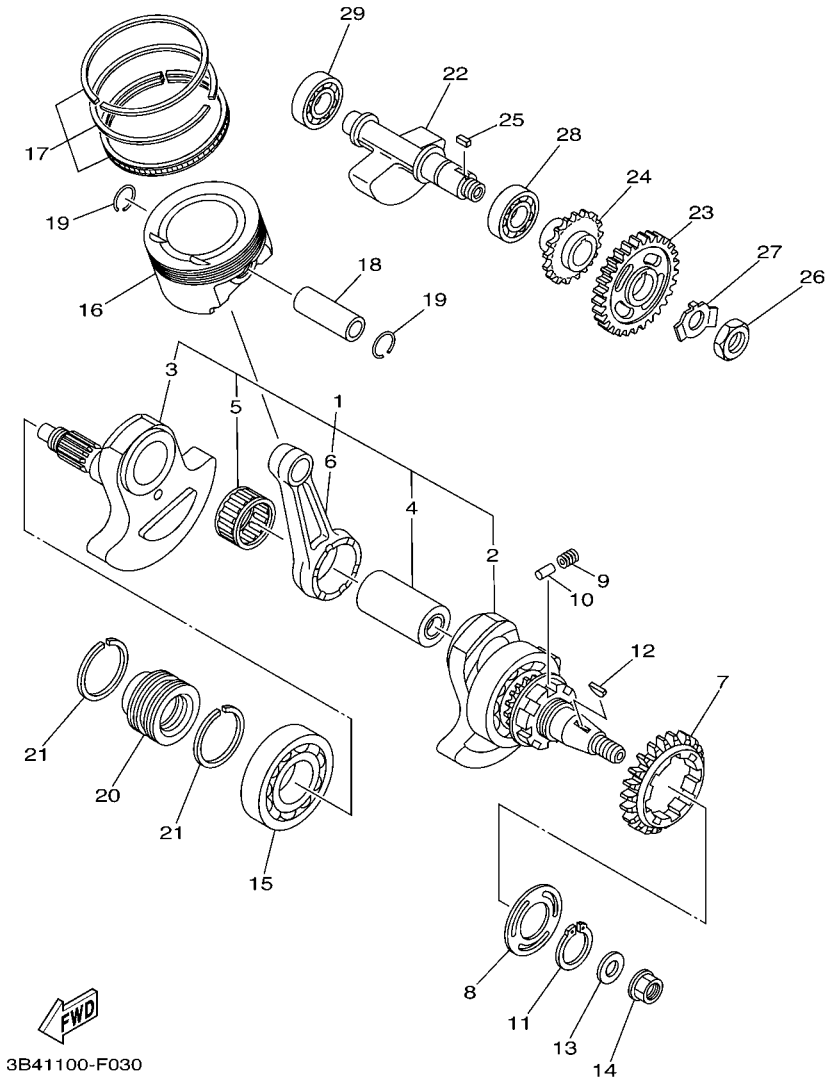

FIG. 3 CRANKSHAFT & PISTON

REF. NO.	PART NO.	DESCRIPTION	USA	CAN	EUR	OCE		REMARKS
28	93306–30534	BEARING	1	1	1	1		
29	93306–30438	BEARING	1	1	1	1		

FIG. 4 VALVE

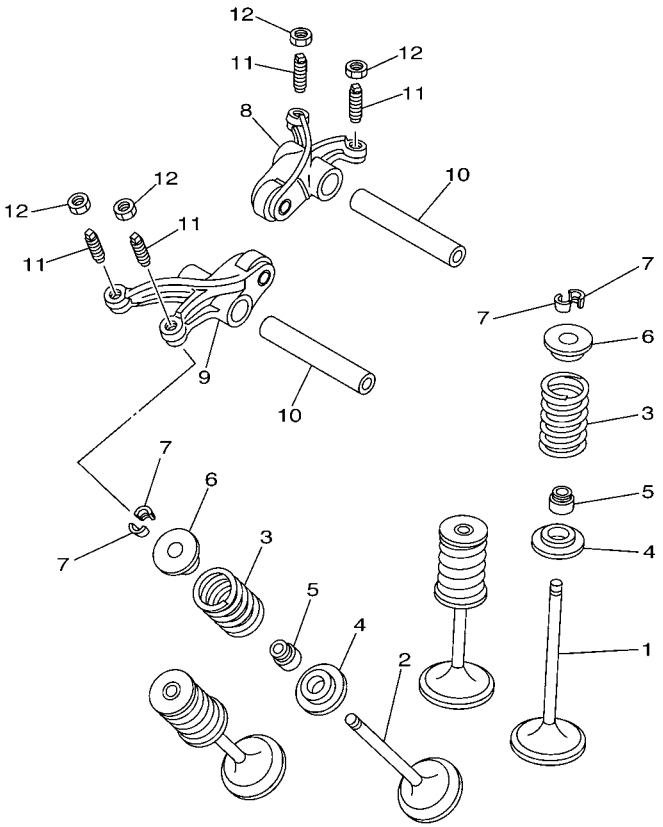

1S31100-E040

REF. NO.	PART NO.	DESCRIPTION	USA	CAN	EUR	OCE		REMARKS
1	5VK–12111–00	VALVE, INTAKE	2	2	2	2		
2	5VK–12121–00	VALVE, EXHAUST	2	2	2	2		
3	5VK–12113–00	SPRING, VALVE INNER	4	4	4	4		
4	3YF–12116–00	SEAT, VALVE SPRING	4	4	4	4		
5	5H0–12119–00	SEAL, VALVE STEM	4	4	4	4		
6	3YF–12117–01	RETAINER, VALVE SPRING	4	4	4	4		
7	4G0–12118–00	COTTER, VALVE	8	8	8	8		
8	5VK–12151–00	ARM, VALVE ROCKER	1	1	1	1		
9	5VK–12161–00	ARM, VALVE ROCKER 2	1	1	1	1		
10	5VK–12146–00	SHAFT, ROCKER	2	2	2	2		
11	5XT–12159–00	SCREW, VALVE ADJUSTING	4	4	4	4		
12	90170–06128	NUT	4	4	4	4		

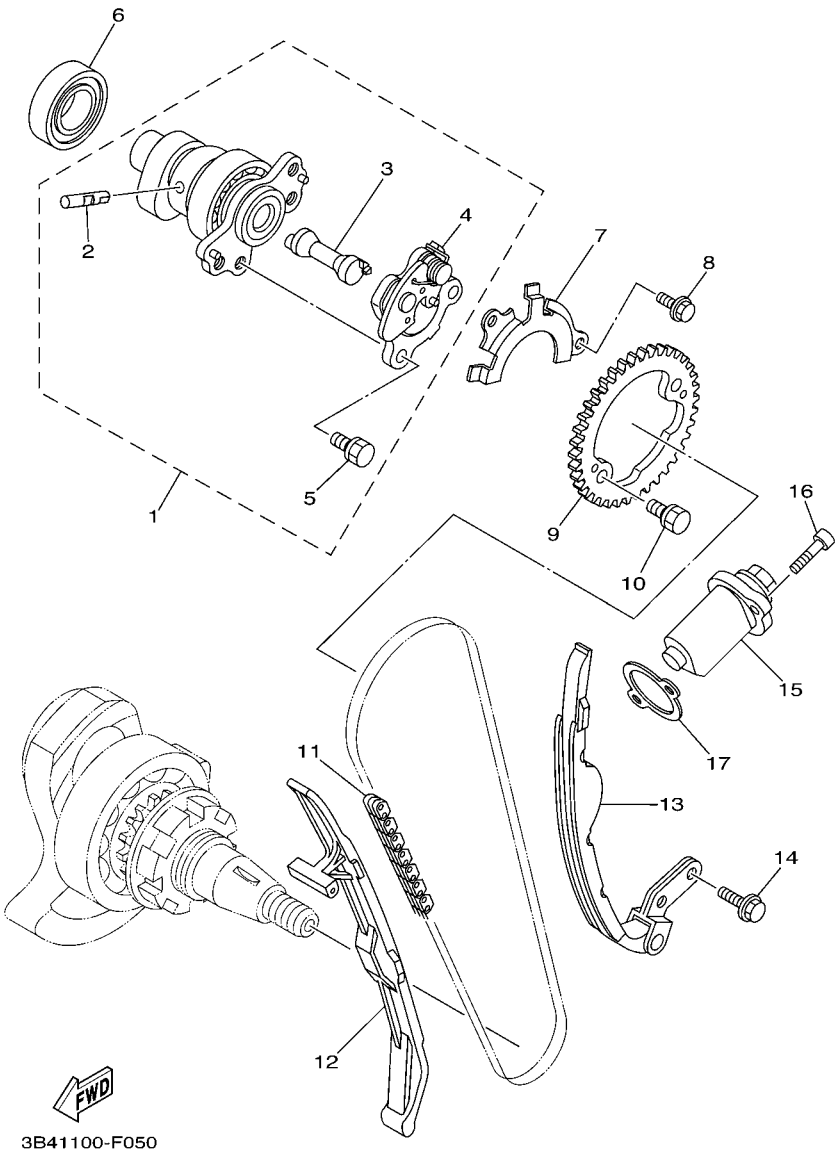

FIG. 5 CAMSHAFT & CHAIN

REF. NO.	PART NO.	DESCRIPTION	USA	CAN	EUR	OCE		REMARKS
1	3B4–12170–01	CAMSHAFT ASSY 1	1	1	1	1		
2	5VK–12284–00	.PIN, DECOMPRESSION LEVER	1	1	1	1		
3	1S3–12290–00	.LEVER, DECOMPRESSION SPRING	1	1	1	1		
4	1S3–12280–01	.DECOMPRESSION ASSY	1	1	1	1		
5	90105–07004	.BOLT, FLANGE	2	2	2	2		
6	93306–07209	BEARING	1	1	1	1		
7	5VK–1111F–00	PLATE	1	1	1	1		
8	90105–06078	BOLT, FLANGE	2	2	2	2		
9	1S3–12176–00	SPROCKET, CAM CHAIN	1	1	1	1		
10	90105–07004	BOLT, FLANGE	2	2	2	2		
11	94591–57126	CHAIN (98XRH2010-126M)	1	1	1	1		
12	3B4–12231–01	GUIDE, STOPPER 1	1	1	1	1		
13	3B4–12241–00	GUIDE, STOPPER 2	1	1	1	1		
14	90105–06082	BOLT, FLANGE	2	2	2	2		
15	3TB–12210–00	TENSIONER ASSY, CAM CHAIN	1	1	1	1		
16	91312–06025	BOLT	2	2	2	2		
17	4DW–12213–00	GASKET, TENSIONER CASE	1	1	1	1		

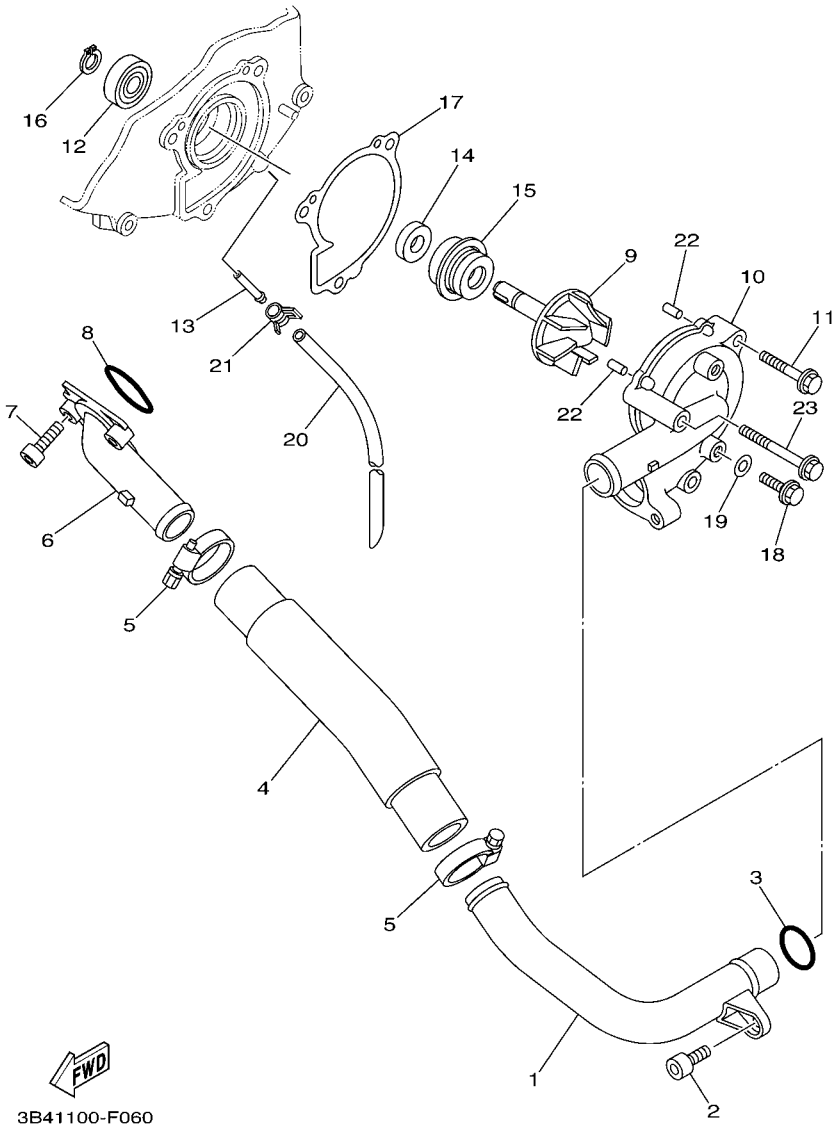

FIG. 6 WATER PUMP

REF. NO.	PART NO.	DESCRIPTION	USA	CAN	EUR	OCE		REMARKS
1	3B4–12481–00	PIPE 1	1	1	1	1		
2	91312–06012	BOLT	1	1	1	1		
3	93210–21190	O-RING	1	1	1	1		
4	3B4–12577–00	HOSE 2	1	1	1	1		
5	90450–32015	HOSE CLAMP ASSY	2	2	2	2		
6	5KM–12469–00	JOINT 1	1	1	1	1		
7	91312–06020	BOLT	2	2	2	2		
8	93210–33786	O-RING	1	1	1	1		
9	3B4–12450–00	IMPELLER SHAFT ASSY	1	1	1	1		
10	3B4–12422–00	COVER, HOUSING	1	1	1	1		
11	95022–06030	BOLT, FLANGE	1	1	1	1		
12	93306–00006	BEARING	1	1	1	1		
13	5D3–1243K–00	PIPE, DRAIN	1	1	1	1		
14	93101–10090	OIL SEAL	1	1	1	1		
15	11H–12438–10	SEAL, MECHANICAL	1	1	1	1		
16	99009–10400	CIRCLIP	1	1	1	1		
17	3B4–12428–00	GASKET, HOUSING COVER 2	1	1	1	1		
18	95022–06010	BOLT, FLANGE	2	2	2	2		
19	90430–06014	GASKET	2	2	2	2		
20	90445–07340	HOSE (L310)	1	1	1	1		
21	90467–07093	CLIP	1	1	1	1		
22	93604–10011	PIN, DOWEL	2	2	2	2		
23	95022–06050	BOLT, FLANGE	1	1	1	1		

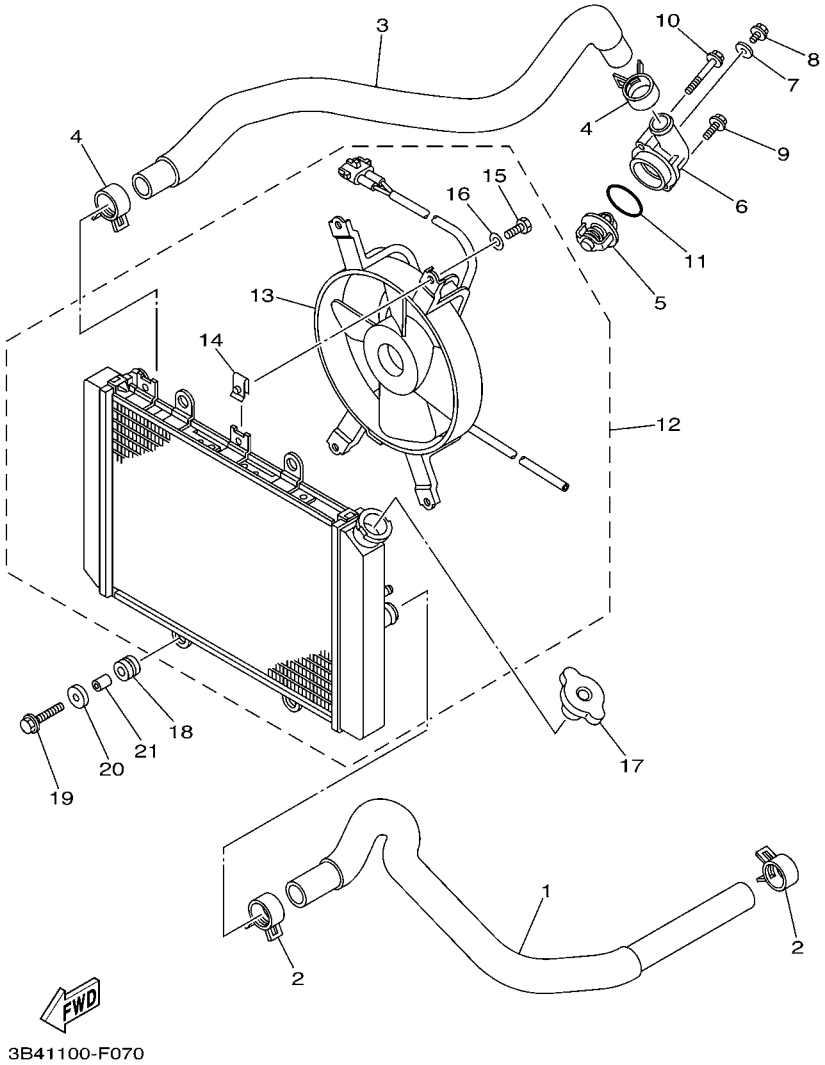

FIG. 7 RADIATOR & HOSE

REF. NO.	PART NO.	DESCRIPTION	USA	CAN	EUR	OCE		REMARKS
1	3B4–12576–00	HOSE 1	1	1	1	1		
2	90467–26189	CLIP	2	2	2	2		
3	3B4–12578–00	HOSE 3	1	1	1	1		
4	90467–26189	CLIP	2	2	2	2		
5	3B4–12411–00	THERMOSTAT	1	1	1	1		
6	1S3–12413–00	COVER, THERMOSTAT	1	1	1	1		
7	90430–06014	GASKET	1	1	1	1		
8	95022–06010	BOLT, FLANGE	1	1	1	1		
9	95022–06020	BOLT, FLANGE	1	1	1	1		
10	95022–06045	BOLT, FLANGE	1	1	1	1		
11	93210–41042	O-RING	1	1	1	1		
12	3B4–1240A–10	RADIATOR ASSY	1	1	1	1		
13	3B4–12405–00	.BLOWER ASSY	1	1	1	1		
14	1AA–12535–00	.PLATE	4	4	4	4		
15	97017–06010	.BOLT	4	4	4	4		
16	92907–06600	.WASHER, PLATE	4	4	4	4		
17	22W–12462–00	CAP, RADIATOR	1	1	1	1		
18	90480–15235	GROMMET	4	4	4	4		
19	95802–06020	BOLT, FLANGE	2	2	2	2		
20	90209–06012	WASHER	2	2	2	2		
21	90387–06113	COLLAR	2	2	2	2		

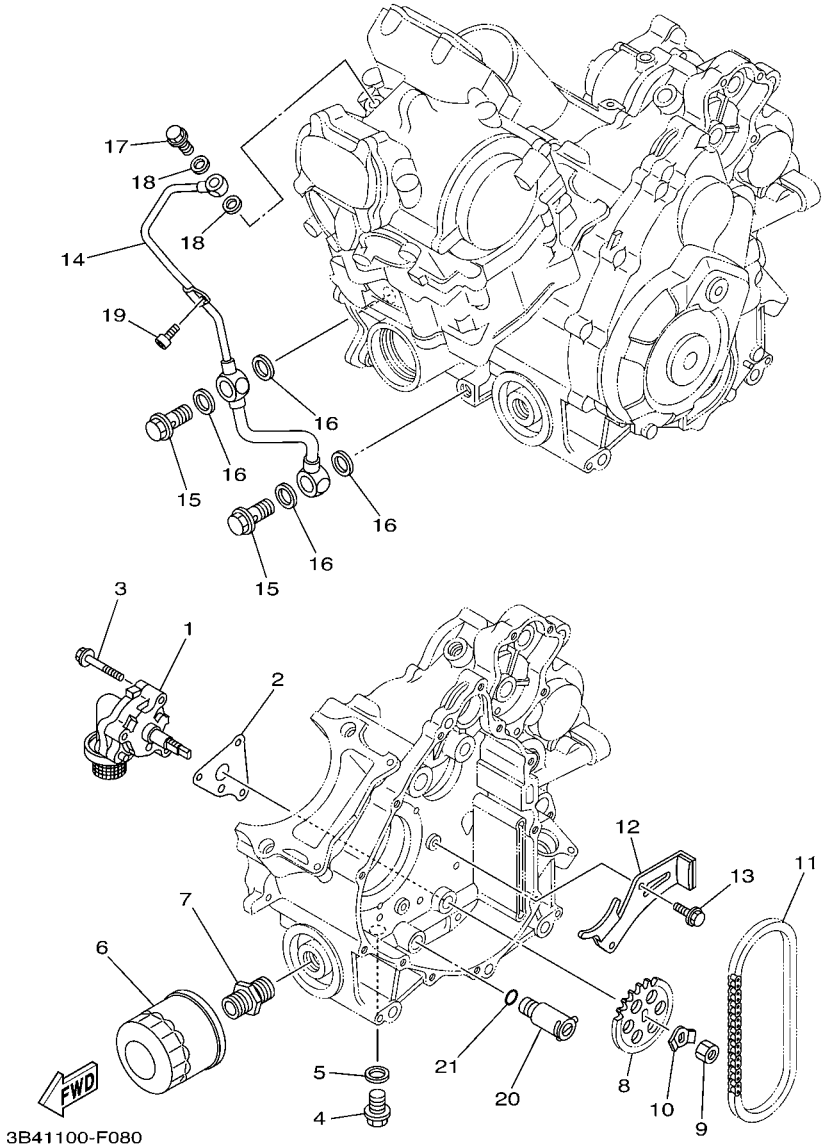

FIG. 8 OIL PUMP

REF. NO.	PART NO.	DESCRIPTION	USA	CAN	EUR	OCE		REMARKS
1	3B4–13300–00	OIL PUMP ASSY	1	1	1	1		
2	3B4–13329–00	GASKET, PUMP COVER	1	1	1	1		
3	95022–06040	BOLT, FLANGE	3	3	3	3		
4	90340–14132	PLUG, STRAIGHT SCREW	1	1	1	1		
5	214–11198–01	GASKET	1	1	1	1		
6	5GH–13440–20	ELEMENT ASSY, OIL CLEANER	1	1	1	1		
7	90401–20003	BOLT, UNION	1	1	1	1		
8	3B4–13355–00	SPROCKET, DRIVEN	1	1	1	1		
9	95312–10600	NUT	1	1	1	1		
10	90215–10008	WASHER, LOCK	1	1	1	1		
11	94580–31074	CHAIN (DID 25HT)	1	1	1	1		
12	3B4–12221–00	GUIDE, STOPPER 3	1	1	1	1		
13	90105–06082	BOLT, FLANGE	2	2	2	2		
14	3B4–13171–00	PIPE, DELIVERY 2	1	1	1	1		
15	90401–14118	BOLT, UNION	2	2	2	2		
16	90430–14043	GASKET	4	4	4	4		
17	90401–10024	BOLT, UNION	1	1	1	1		
18	90430–10188	GASKET	2	2	2	2		
19	91312–06012	BOLT	1	1	1	1		
20	25G–13490–00	RELIEF VALVE ASSY	1	1	1	1		
21	93210–10096	O-RING	1	1	1	1		

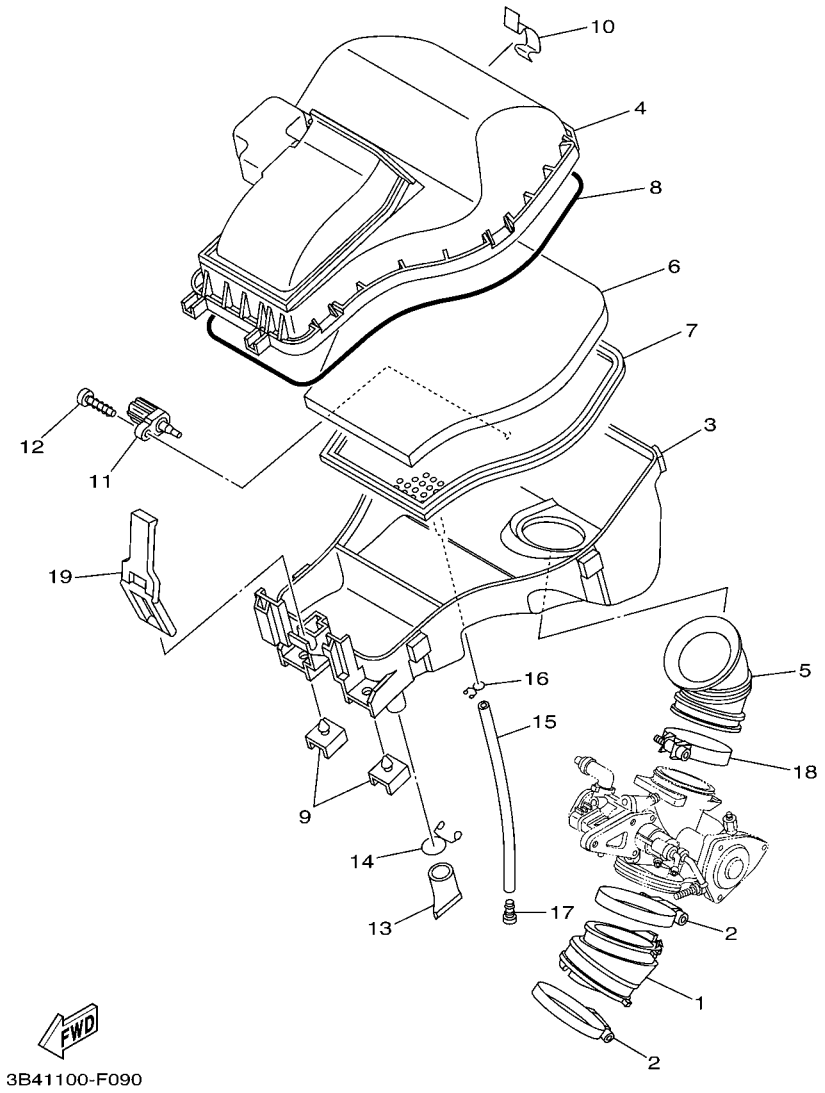

FIG. 9 INTAKE

REF. NO.	PART NO.	DESCRIPTION	USA	CAN	EUR	OCE		REMARKS
1	3B4–13586–00	JOINT, CARBURETOR 1	1	1	1	1		
2	90450–72004	HOSE CLAMP ASSY	2	2	2	2		
3	3B4–14411–10	CASE, AIR CLEANER 1	1	1	1	1		
4	3B4–14402–01	CAP ASSY, AIR CLEANER	1	1	1	1		
5	3B4–14453–00	JOINT, AIR CLEANER 1	1	1	1	1		
6	3B4–14451–00	ELEMENT, AIR CLEANER	1	1	1	1		
7	3B4–14472–00	PLATE, ELEMENT	1	1	1	1		
8	3B4–14457–00	SEAL	1	1	1	1		
9	3B4–14409–00	DAMPER	2	2	2	2		
10	3B4–14424–00	CLIP, CAP FITTING	6	6	6	6		
11	8FP–85886–00	SENSOR, AIR TEMPERATURE	1	1	1	1		
12	97702–50520	SCREW, TAPPING	1	1	1	1		
13	59V–14457–00	SEAL	1	1	1	1		
14	90467–220A1	CLIP	1	1	1	1		
15	91A20–07020	TUBE, FLEXIBLE VINYL (L200)	1	1	1	1		
16	90467–10041	CLIP	1	1	1	1		
17	90338–08174	PLUG	1	1	1	1		
18	90450–59006	HOSE CLAMP ASSY	1	1	1	1		
19	3B4–14455–00	BAND	1	1	1	1		

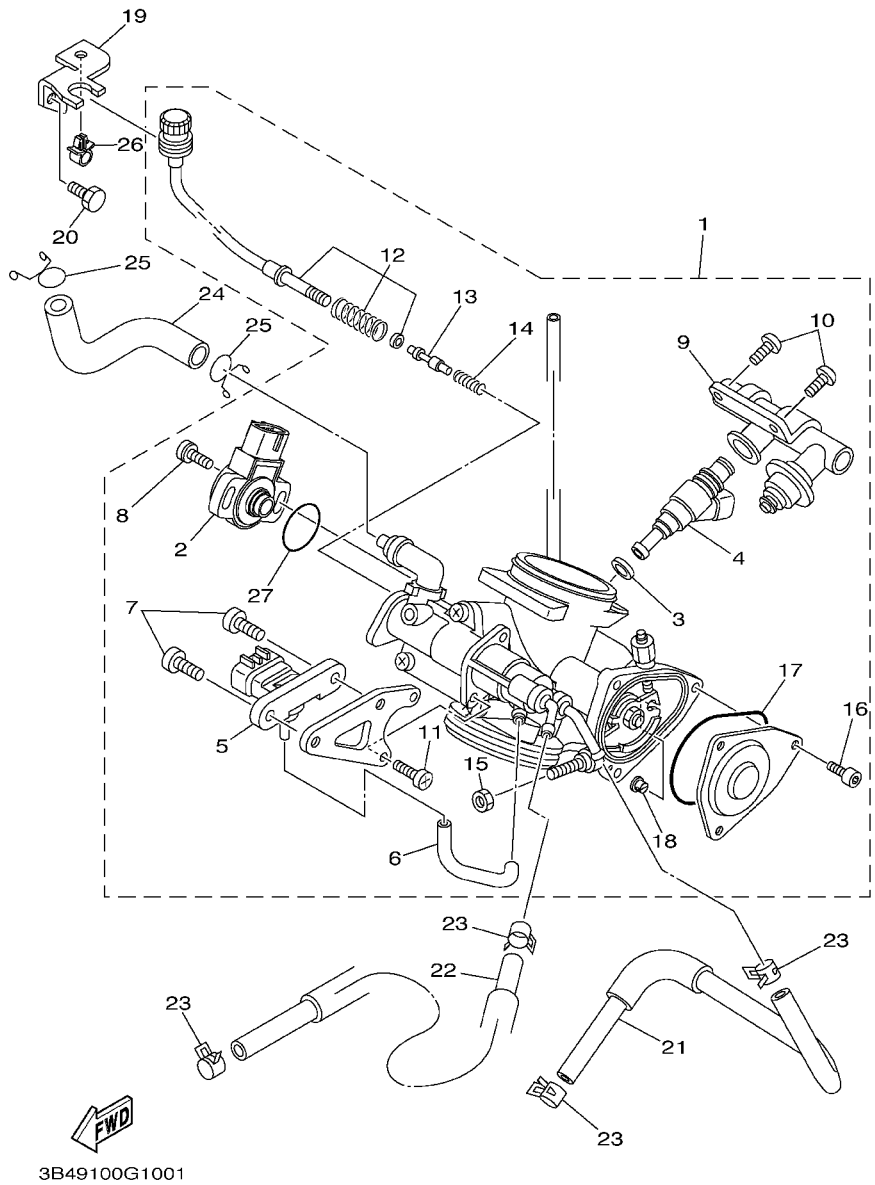

FIG. 10 THROTTLE BODY ASSY 1

REF. NO.	PART NO.	DESCRIPTION	USA	CAN	EUR	OCE		REMARKS
1	3B4–13750–10	THROTTLE BODY ASSY	1	1	1	1		
2	3B4–85885–00	.THROTTLE SENSOR SET	1	1	1	1		
3	8FP–13556–00	.GASKET, MANIFOLD	1	1	1	1		
4	3B4–13761–00	.INJECTOR	1	1	1	1		
5	1C7–82380–00	.SENSOR, PRESSURE	1	1	1	1		
6	5JW–14348–00	.PIPE 1	1	1	1	1		
7	98507–06010	.SCREW, PAN HEAD	2	2	2	2		
8	8CC–14216–10	.SCREW	2	2	2	2		
9	3B4–13160–00	.DELIVERY PIPE ASSY 1	1	1	1	1		
10	98507–06012	.SCREW, PAN HEAD	2	2	2	2		
11	98507–05012	.SCREW, PAN HEAD	2	2	2	2		
12	3B4–14503–00	.ADJUST SCREW SET	1	1	1	1		
13	1S3–13493–00	.PLUNGER	1	1	1	1		
14	4BH–14134–00	.SPRING, AIR ADJUSTING	1	1	1	1		
15	1S3–14161–00	.NUT, CABLE ADJUSTING	1	1	1	1		
16	91312–04006	.BOLT	3	3	3	3		
17	5LP–14147–00	.O-RING	1	1	1	1		
18	1UY–14155–00	.GUIDE, CABLE	1	1	1	1		
19	3B4–14413–10	STAY	1	1	1	1		
20	97002–06012	BOLT	1	1	1	1		
21	3B4–1243A–00	HOSE 1	1	1	1	1		
22	90445–12006	HOSE (L630)	1	1	1	1		
23	90467–110A2	CLIP	4	4	4	4		
24	3B4–13545–00	HOSE 1	1	1	1	1		
25	90467–140A4	CLIP	2	2	2	2		
26	90464–06007	CLAMP	1	1	1	1		
27	5YP–14562–00	.O-RING	1	1	1	1		

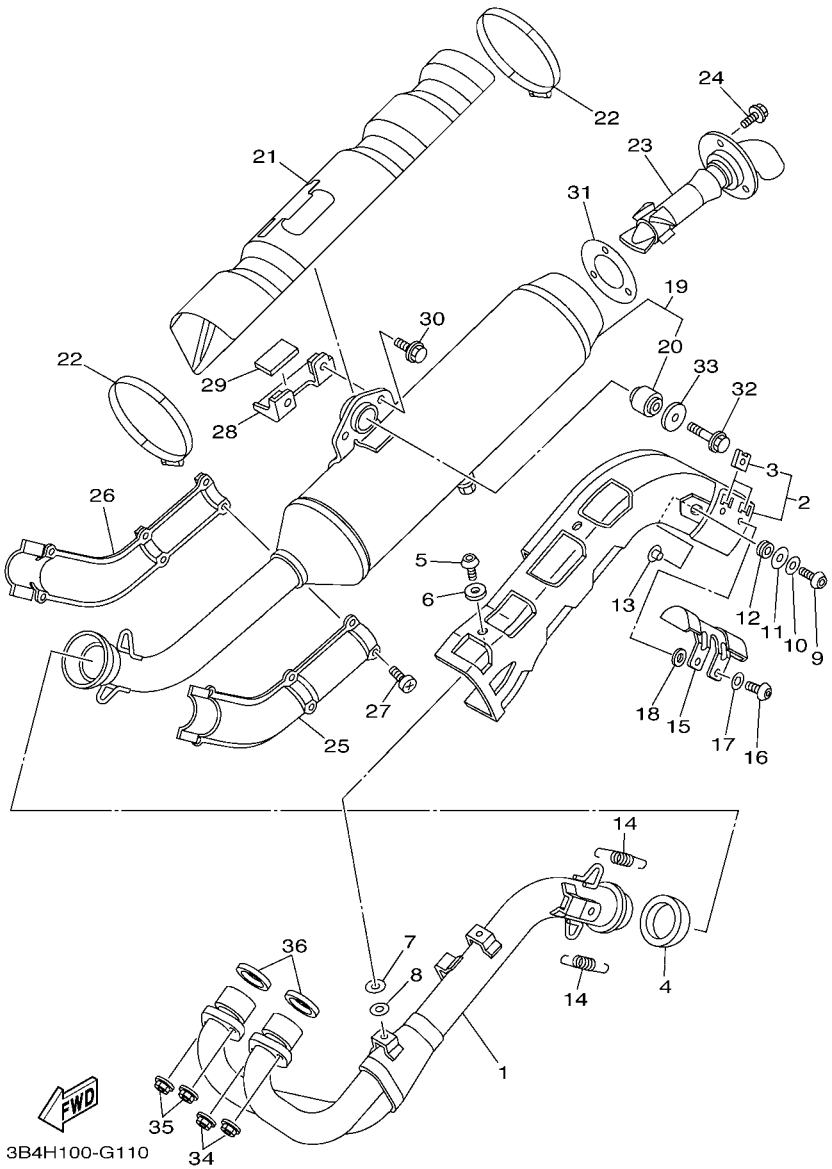

FIG. 11 EXHAUST

REF. NO.	PART NO.	DESCRIPTION	USA	CAN	EUR	OCE		REMARKS
1	3B4–14611–01	PIPE, EXHAUST 1	1	1	1	1		
2	3B4–14627–01	COVER, EXHAUST	1	1	1	1		
3	90183–060A2	.NUT, SPRING	2	2	2	2		
4	3B4–14714–10	GASKET, MUFFLER	1	1	1	1		
5	92012–06014	BOLT, BUTTON HEAD	3	3	3	3		
6	3B4–14617–00	WASHER	3	3	3	3		
7	90201–06019	WASHER, PLATE	3	3	3	3		
8	90201–05019	WASHER, PLATE	3	3	3	3		
9	92012–06020	BOLT, BUTTON HEAD	1	1	1	1		
10	90201–06036	WASHER, PLATE	1	1	1	1		
11	90201–06081	WASHER, PLATE	1	1	1	1		
12	90480–17001	GROMMET	1	1	1	1		
13	3B4–14638–00	COLLAR	1	1	1	1		
14	90506–30006	SPRING, TENSION	2	2	2	2		
15	3B4–14758–01	PROTECTOR, SILENCER	1	1	1	1		
16	92012–06012	BOLT, BUTTON HEAD	2	2	2	2		
17	92902–06200	WASHER	2	2	2	2		
18	90201–05015	WASHER, PLATE	2	2	2	2		
19	3B4–W1471–10	MUFFLER COMP. 1	1	1	1	1		
20	5KM–27414–01	.DAMPER	1	1	1	1		
21	3B4–14718–10	PROTECTOR, MUFFLER 1	1	1	1	1		
22	90450–99010	HOSE CLAMP ASSY	3	3	3	3		
23	3B4–14752–00	PIPE, OUTLET	1	1	1	1		
24	95022–06008	BOLT, FLANGE	3	3	3	3		
25	3B4–1471C–00	PROTECTOR ASSY 1	1	1	1	1		
26	3B4–1472C–00	PROTECTOR ASSY., 2	1	1	1	1		
27	98502–06016	SCREW, PAN HEAD	6	6	6	6		

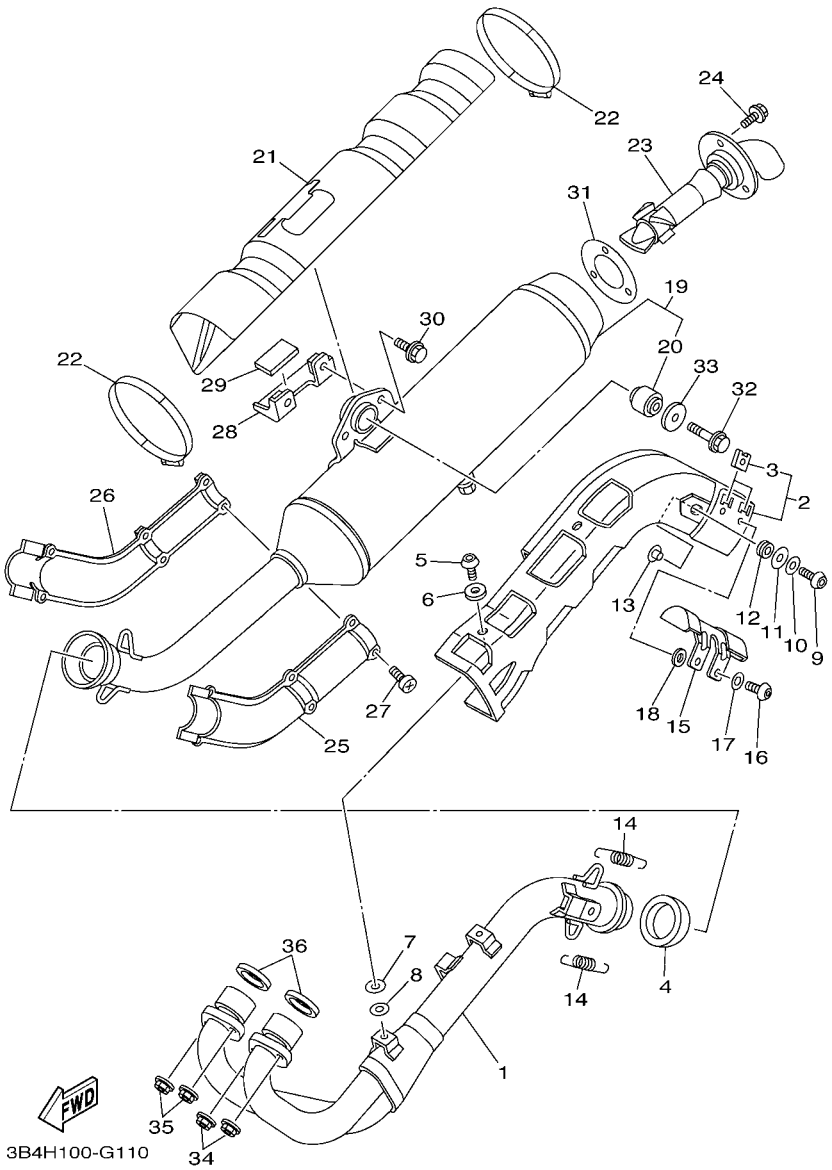

FIG. 11 EXHAUST

REF. NO.	PART NO.	DESCRIPTION	USA	CAN	EUR	OCE		REMARKS
28	3B4–1477U–00	STOPPER 1	1	1	1	1		
29	3B4–14733–00	MAT 1	1	1	1	1		
30	95822–08012	BOLT, FLANGE	2	2	2	2		
31	3B4–14755–00	GASKET, SILENCER	1	1	1	1		
32	95812–08040	BOLT, FLANGE	1	1	1	1		
33	3B4–14759–00	WASHER	1	1	1	1		
34	90179–08029	NUT	2	2	2	2		
35	95702–08500	NUT, WITH WASHER	2	2	2	2		
36	3YF–14613–01	GASKET, EXHAUST PIPE	2	2	2	2		

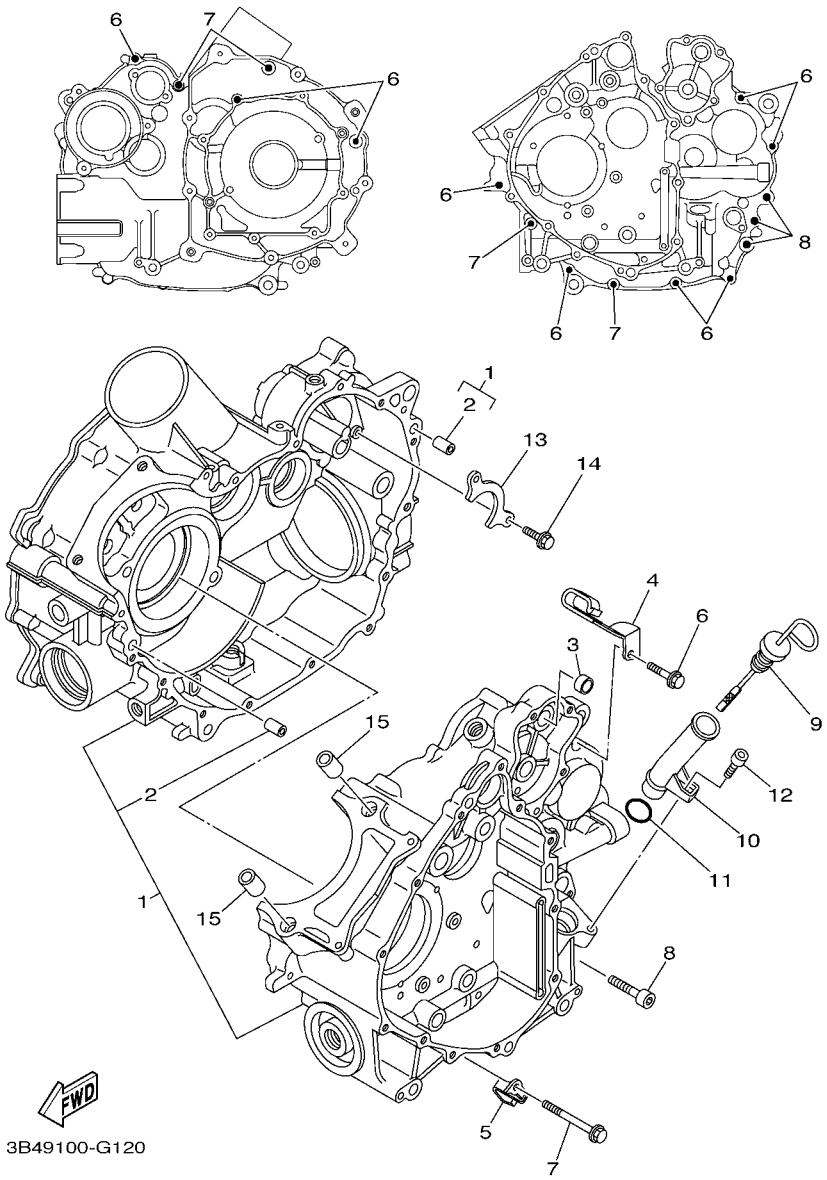

FIG. 12 CRANKCASE

REF. NO.	PART NO.	DESCRIPTION	USA	CAN	EUR	OCE		REMARKS
1	3B4–15100–23	CRANKCASE ASSY	1	1	1	1		
2	99530–10116	.PIN, DOWEL	2	2	2	2		
3	3B4–18581–00	SPACER, CAM SHAFT	1	1	1	1		
4	90462–16003	CLAMP	1	1	1	1		
5	90462–08049	CLAMP	1	1	1	1		
6	95022–06030	BOLT, FLANGE	9	9	9	9		
7	95022–06060	BOLT, FLANGE	4	4	4	4		
8	91312–08040	BOLT	3	3	3	3		
9	3B4–15362–00	PLUG, OIL LEVEL	1	1	1	1		
10	3B4–15112–01	PIPE, OIL	1	1	1	1		
11	93210–21631	O-RING	1	1	1	1		
12	91312–06012	BOLT	1	1	1	1		
13	3B4–15388–00	PLATE, BEARING COVER	1	1	1	1		
14	90105–06082	BOLT, FLANGE	2	2	2	2		
15	99530–14016	PIN, DOWEL	2	2	2	2		

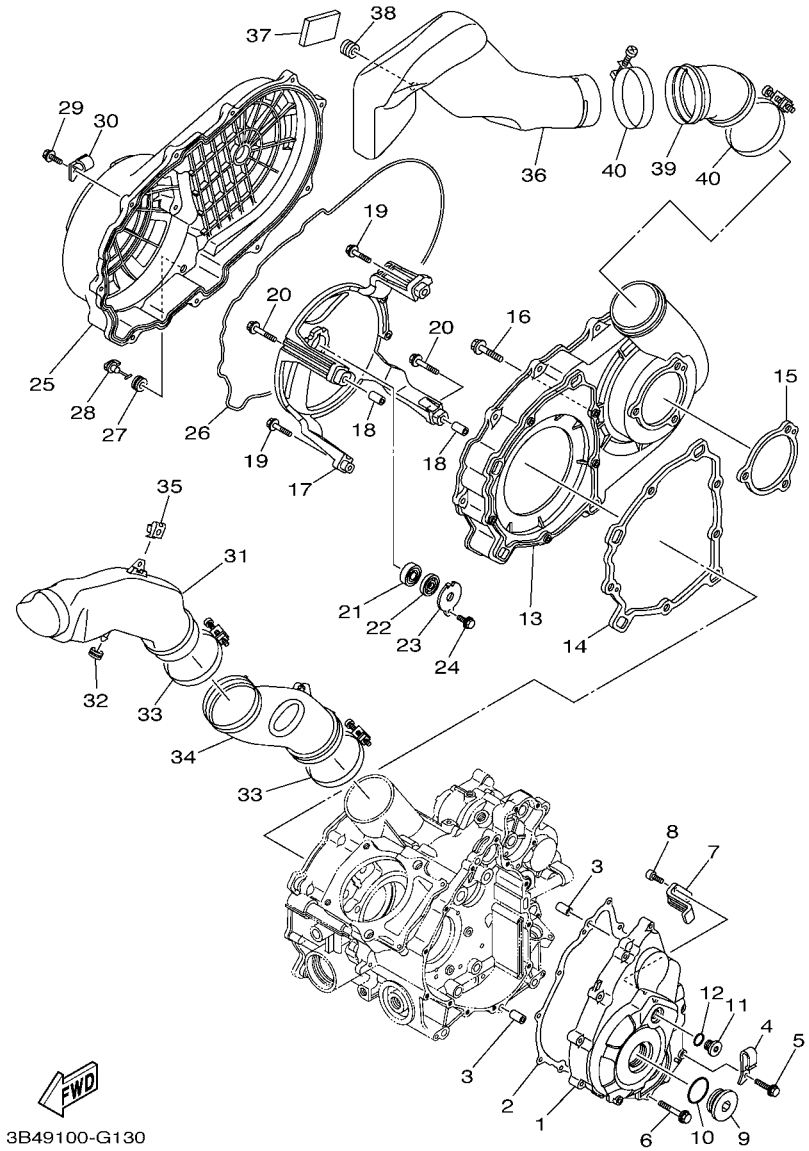

FIG. 13 CRANKCASE COVER 1

REF. NO.	PART NO.	DESCRIPTION	USA	CAN	EUR	OCE		REMARKS
1	3B4–15411–00	COVER, CRANKCASE 1	1	1	1	1		
2	3B4–15451–00	GASKET, CRANKCASE COVER 1	1	1	1	1		
3	99530–10116	PIN, DOWEL	2	2	2	2		
4	90461–08004	CLAMP	1	1	1	1		
5	95022–06030	BOLT, FLANGE	11	11	11	11		
6	95022–06050	BOLT, FLANGE	1	1	1	1		
7	3B4–15113–00	PLATE	1	1	1	1		
8	90110–05031	BOLT, HEXAGON SOCKET HEAD	2	2	2	2		
9	90340–36002	PLUG, STRAIGHT SCREW	1	1	1	1		
10	93210–357A3	O-RING	1	1	1	1		
11	90340–14011	PLUG, STRAIGHT SCREW	1	1	1	1		
12	93210–14369	O-RING	1	1	1	1		
13	3B4–15421–00	COVER, CRANKCASE 2	1	1	1	1		
14	3B4–15453–00	GASKET	1	1	1	1		
15	3B4–15315–00	SEAL, CRANKCASE	1	1	1	1		
16	95822–06030	BOLT, FLANGE	8	8	8	8		
17	3B4–15442–00	HOUSING, BEARING	1	1	1	1		
18	99530–10116	PIN, DOWEL	2	2	2	2		
19	95822–06030	BOLT, FLANGE	2	2	2	2		
20	95822–06040	BOLT, FLANGE	2	2	2	2		
21	93306–20120	BEARING	1	1	1	1		
22	93101–12168	OIL SEAL	1	1	1	1		
23	4WV–15381–00	PLATE, BEARING COVER	1	1	1	1		
24	95022–06016	BOLT, FLANGE	1	1	1	1		
25	3B4–15431–00	COVER, CRANKCASE 3	1	1	1	1		
26	3B4–15379–00	SEAL, CRANKCASE	1	1	1	1		
27	90480–13018	GROMMET	1	1	1	1		

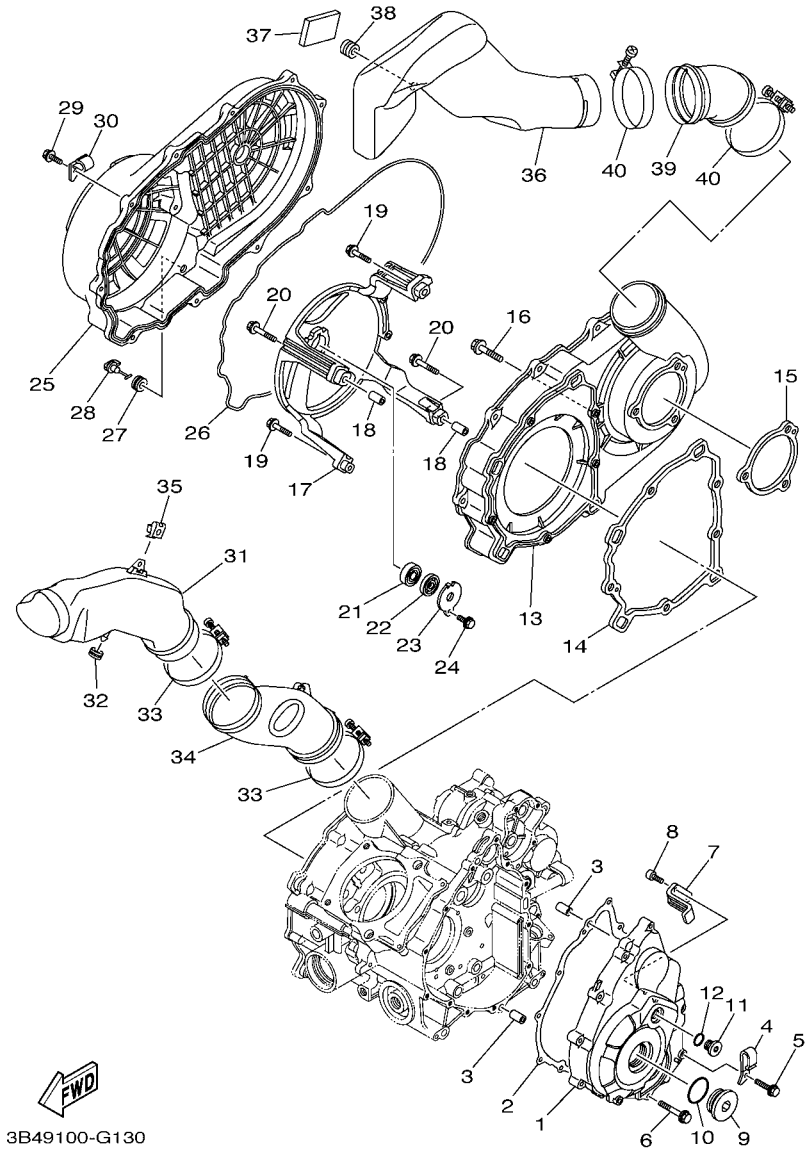

FIG. 13 CRANKCASE COVER 1

REF. NO.	PART NO.	DESCRIPTION	USA	CAN	EUR	OCE		REMARKS
28	5KM–15351–00	PLUG, DRAIN	1	1	1	1		
29	95822–06020	BOLT, FLANGE	12	12	12	12		
30	90462–08055	CLAMP	1	1	1	1		
31	3B4–15471–00	DUCT, AIR	1	1	1	1		
32	90480–13567	GROMMET	1	1	1	1		
33	90460–85135	CLAMP, HOSE	2	2	2	2		
34	3B4–15472–00	SEAL, AIR DUCT	1	1	1	1		
35	90183–060A5	NUT, SPRING	1	1	1	1		
36	3B4–15473–00	DUCT, AIR	1	1	1	1		
37	1S3–82123–00	SEAT, BATTERY	2	2	2	2		
38	90480–13398	GROMMET	1	1	1	1		
39	3B4–15474–00	SEAL, AIR DUCT	1	1	1	1		
40	90460–85135	CLAMP, HOSE	2	2	2	2		

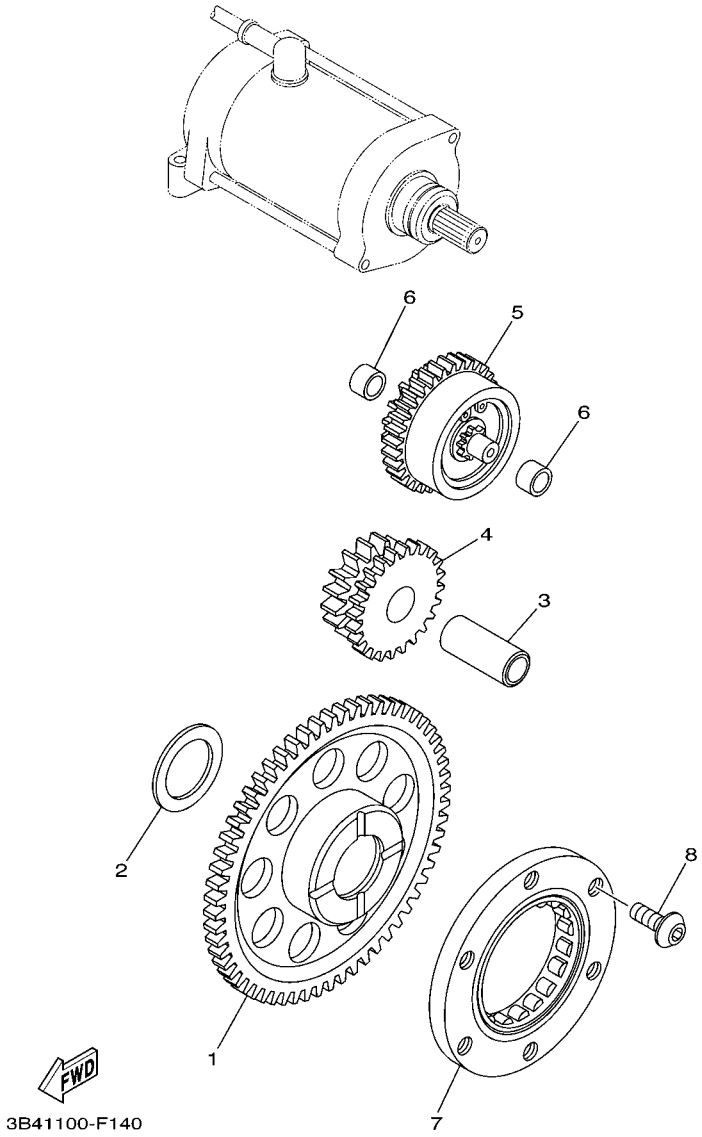

FIG. 14 STARTER CLUTCH

REF. NO.	PART NO.	DESCRIPTION	USA	CAN	EUR	OCE		REMARKS
1	3B4–15515–00	GEAR 3 (49T)	1	1	1	1		
2	90201–286K9	WASHER, PLATE (T1.0)	1	1	1	1		
3	3B4–15522–00	SHAFT 2	1	1	1	1		
4	3B4–15517–00	GEAR, IDLER 2 (25T/15T)	1	1	1	1		
5	1S3–15560–00	DAMPER ASSY	1	1	1	1		
6	90380–10002	BUSH, SOLID	2	2	2	2		
7	5KM–15590–00	STARTER ONE-WAY ASSY	1	1	1	1		
8	90149–08018	SCREW	3	3	3	3		

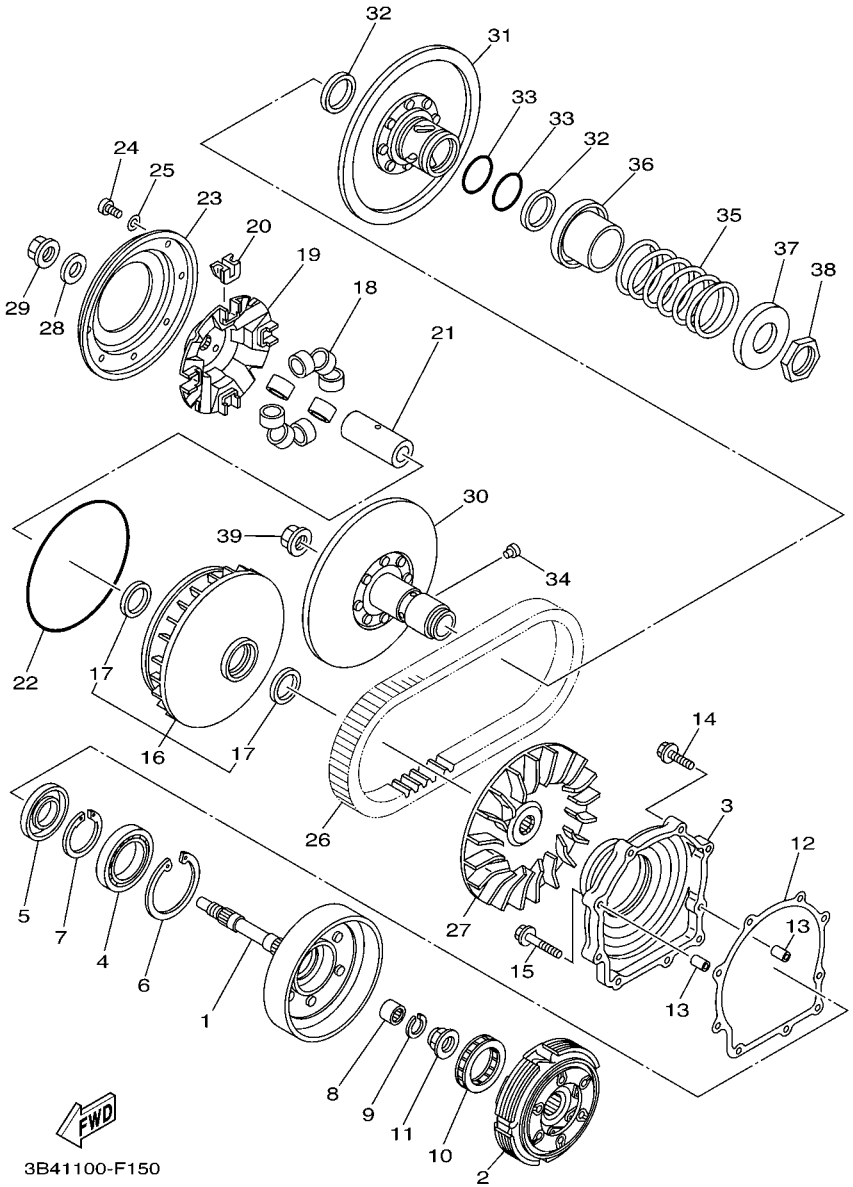

FIG. 15 CLUTCH

REF. NO.	PART NO.	DESCRIPTION	USA	CAN	EUR	OCE		REMARKS
1	16B–16611–00	CLUTCH HOUSING COMP.	1	1	1	1		
2	3B4–16620–00	CLUTCH CARRIER ASSY	1	1	1	1		
3	3B4–15163–00	HOUSING, BEARING 1	1	1	1	1		
4	93316–01003	BEARING	1	1	1	1		
5	93102–35004	OIL SEAL	1	1	1	1		
6	99009–80500	CIRCLIP	1	1	1	1		
7	93410–46079	CIRCLIP	1	1	1	1		
8	93315–21813	BEARING	1	1	1	1		
9	93450–24062	CIRCLIP	1	1	1	1		
10	4SH–16664–00	BEARING, ONE WAY	1	1	1	1		
11	90179–22021	NUT	1	1	1	1		
12	3B4–15463–00	GASKET, COVER PINION 2	1	1	1	1		
13	99530–10116	PIN, DOWEL	2	2	2	2		
14	95022–06030	BOLT, FLANGE	7	7	7	7		
15	95022–06040	BOLT, FLANGE	2	2	2	2		
16	3B4–17606–00	PRIMARY SLIDING SHEAVE COMP.	1	1	1	1		
17	93101–35001	.OIL SEAL	2	2	2	2		
18	3B4–17632–00	WEIGHT	8	8	8	8		
19	3B4–17623–00	CAM	1	1	1	1		
20	3B4–17653–00	SLIDER	4	4	4	4		
21	3B4–17645–00	COLLAR	1	1	1	1		
22	93211–594A4	O-RING	1	1	1	1		
23	4WV–17639–10	STOPPER	1	1	1	1		
24	90157–04006	SCREW, PAN HEAD	8	8	8	8		
25	90201–047R9	WASHER, PLATE	8	8	8	8		
26	3B4–17641–00	V-BELT	1	1	1	1		
27	3B4–17611–00	SHEAVE, PRIMARY FIXED	1	1	1	1		

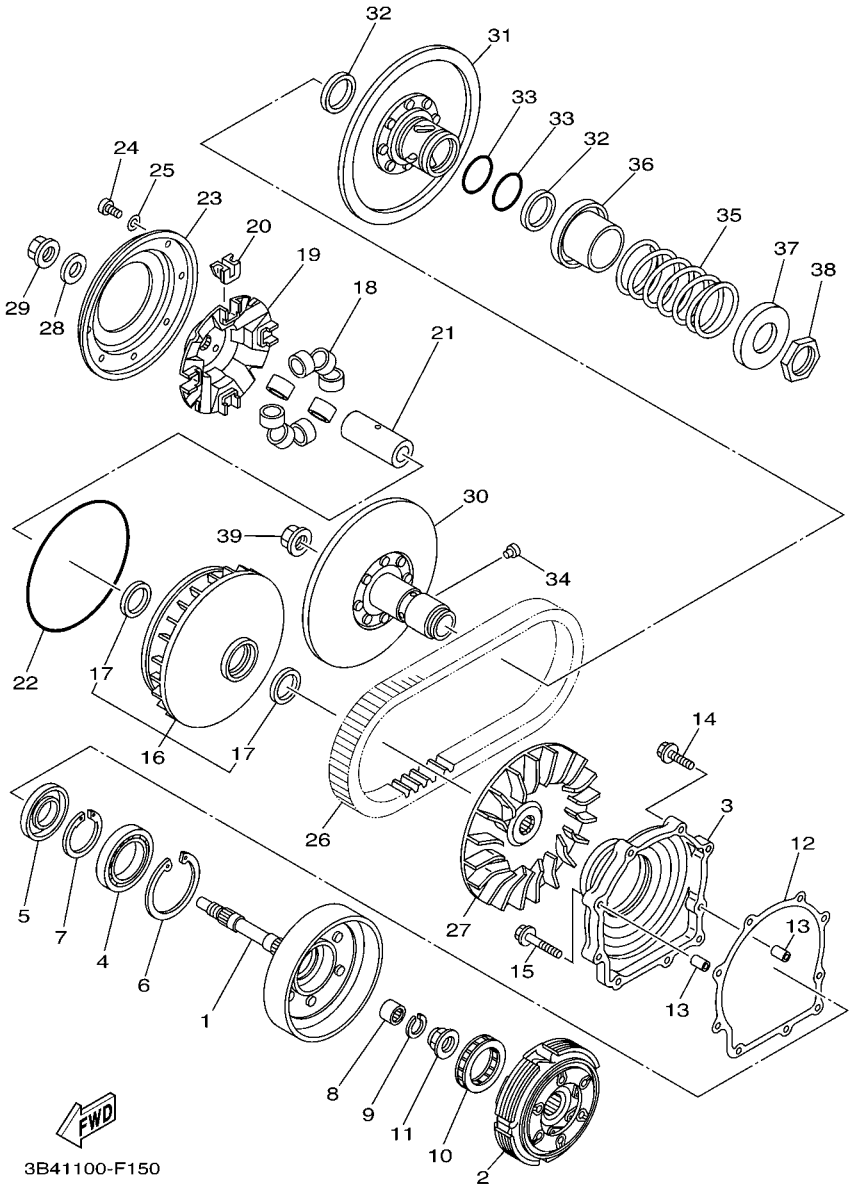

FIG. 15 CLUTCH

REF. NO.	PART NO.	DESCRIPTION	USA	CAN	EUR	OCE		REMARKS
28	90201–190T7	WASHER, PLATE	1	1	1	1		
29	90179–16005	NUT	1	1	1	1		
30	3B4–17660–00	SECONDARY FIXED SHEAVE COMP.	1	1	1	1		
31	3B4–17670–00	SECONDARY SLIDING SHEAVE	1	1	1	1		
32	93104–41119	OIL SEAL	2	2	2	2		
33	93210–44545	O-RING	2	2	2	2		
34	4CW–17664–00	PIN, GUIDE	4	4	4	4		
35	90501–650A0	SPRING, COMPRESSION	1	1	1	1		
36	4WV–17684–00	SEAT, SECONDARY SPRING	1	1	1	1		
37	4WV–17644–00	SEAT,SPRING	1	1	1	1		
38	90170–36279	NUT	1	1	1	1		
39	90179–16005	NUT	1	1	1	1		

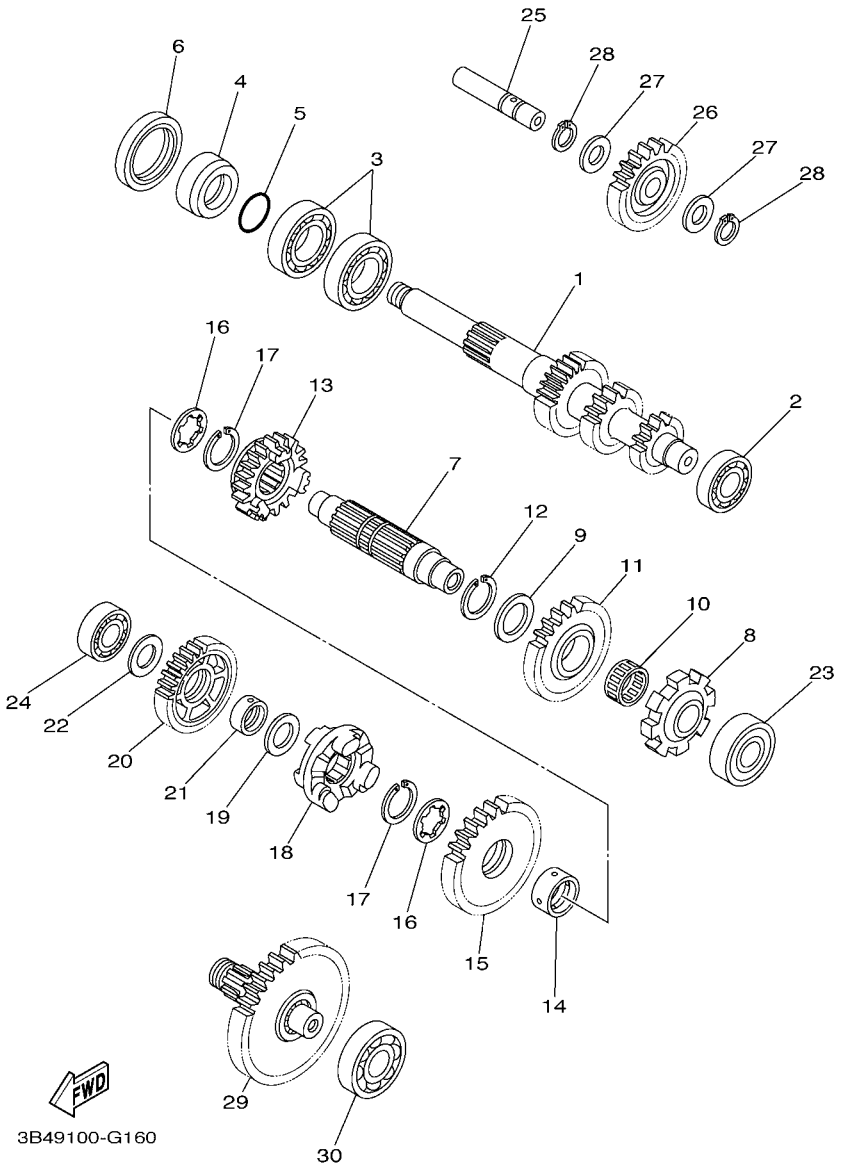

FIG. 16 TRANSMISSION

REF. NO.	PART NO.	DESCRIPTION	USA	CAN	EUR	OCE		REMARKS
1	3B4–17681–10	SHAFT, SECONDARY	1	1	1	1		
2	93306–00426	BEARING	1	1	1	1		
3	93306–07801	BEARING	2	2	2	2		
4	90387–26001	COLLAR	1	1	1	1		
5	93210–26001	O-RING	1	1	1	1		
6	93102–42004	OIL SEAL	1	1	1	1		
7	3B4–17421–00	AXLE, DRIVE	1	1	1	1		
8	3B4–17473–00	STOPPER	1	1	1	1		
9	90201–25290	WASHER, PLATE	1	1	1	1		
10	93310–32590	BEARING	1	1	1	1		
11	3B4–17253–00	GEAR, REVERSE WHEEL 2 (28T)	1	1	1	1		
12	93440–25084	CIRCLIP	1	1	1	1		
13	3B4–17582–00	GEAR, MIDDLE DRIVE (21T)	1	1	1	1		
14	90387–250R3	COLLAR	1	1	1	1		
15	3B4–17233–00	GEAR, LOW WHEEL (31T)	1	1	1	1		
16	90214–22007	WASHER, CLAW	2	2	2	2		
17	93440–25084	CIRCLIP	2	2	2	2		
18	3B4–17285–00	CLUTCH, DOG	1	1	1	1		
19	90201–20028	WASHER, PLATE	1	1	1	1		
20	3B4–17223–10	GEAR, HIGH WHEEL (29T)	1	1	1	1		
21	90387–20021	COLLAR	1	1	1	1		
22	90201–170U8	WASHER, PLATE	1	1	1	1		
23	93306–20464	BEARING	1	1	1	1		
24	93306–20309	BEARING	1	1	1	1		
25	3B4–17432–00	AXLE, IDLE	1	1	1	1		
26	3B4–17243–00	GEAR, REVERSE WHEEL 1 (23T)	1	1	1	1		Go to P/N : PE0-MC-090023
27	90201–150U6	WASHER, PLATE	2	2	2	2		

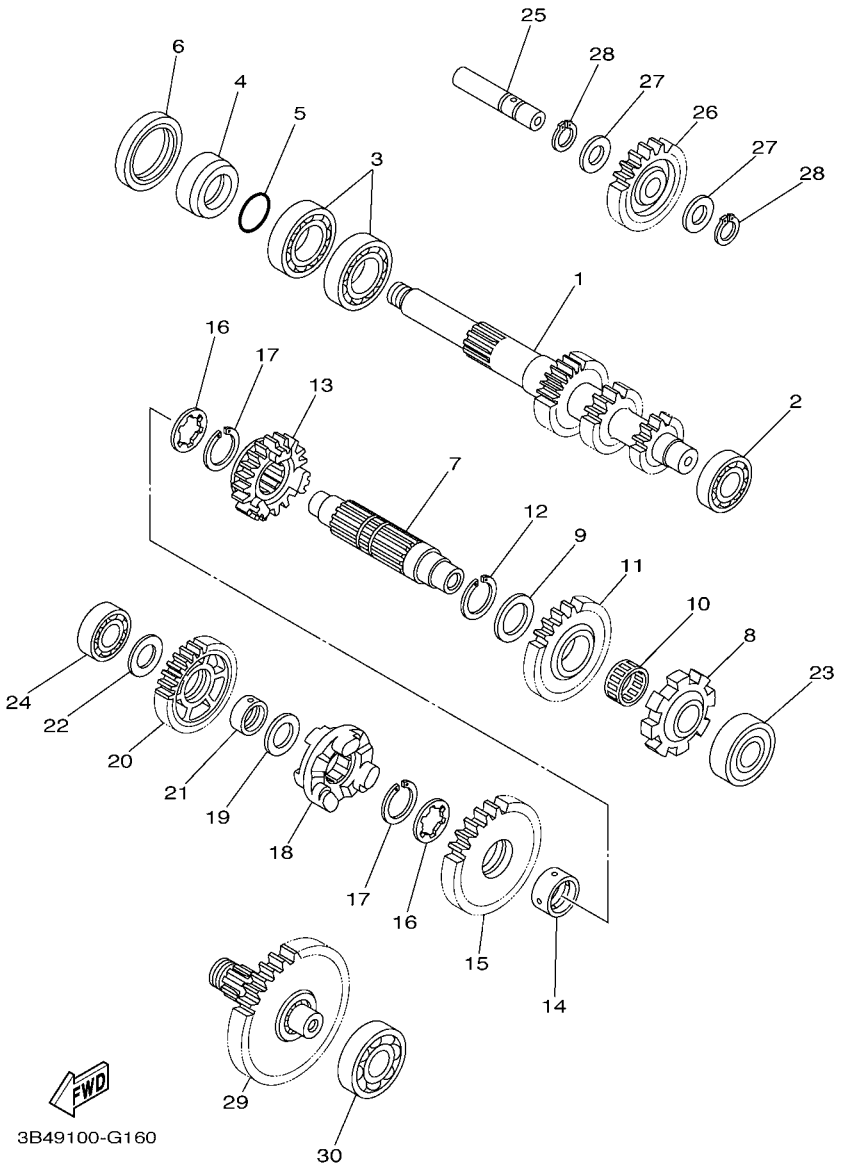

FIG. 16 TRANSMISSION

REF. NO.	PART NO.	DESCRIPTION	USA	CAN	EUR	OCE		REMARKS
28	93440–15012	CIRCLIP	2	2	2	2		
29	3B4–17520–00	DRIVE PINION ASSY (41T)	1	1	1	1		Go to P/N : PE0-MC-090023
30	93306–30438	BEARING	1	1	1	1		

PARTS NEWS

YAMAHA MOTOR CO., LTD.
2500 SHINGAI IWATA SHIZUOKA JAPAN

News No. PE0-MC-090023 1/2

1 **Parts numbers correction Aug,31,2009**

Date: Apr./28/2009
Signature: M.Saito

Cause ☑ Revision Notice ☐ Correction ☐ Sales Unit Change ☐ Others

Model	See the"List of Models and CATALOGUE No's below."
Subject	PARTS CATALOGUE CORRECTIONS
CATALOGUE NO.	See the"List of Models and CATALOGUE No's below."

Time of YPEC Revision Text, Illustration --> May./20/2009 PDF Replace --> May./20/2009
(YPEC = Yamaha Parts Electrical Catalogue = Website parts catalogue)

FIG.16 TRANSMISSION SECTION

1. LIST CORRECTION

Ref.No.	OLD PART No.	NEW PART No.	PART NAME	Q'TY	INTERCHANGE ABILITY	REMARKS
25	3B4-17432-00	**3B4-17432-01**	AXLE, IDLE	1	○	
26	3B4-17243-00	**16B-17243-00**	GEAR, REVERSE WHEEL	1	○	**Note-1**
27	90201-150U6	**90201-15029**	WASHER, PLATE	2-->**1**	○	
28	1 ~~90344-15012~~ 93440-15012	**-----**	CIRCLIP	2	○	**Delete**
31	-----	**93310-31576**	BEARING	1	○	**Add.**
32	-----	**90387-15017**	COLLAR	1	○	**Add.**

* These changes are applied from initial production.
* The parts marked with ○-○ indicates interchangeability with a set.

Note-1; As for 3B4-17243-00, parts supply is discontinued.
Old Gear reverse wheel is not interchangeable with new Gear reverse wheel.
When you exchange old Gear reverse wheel , please exchange in Gear reverse wheel set (99999-03870).

**Components parts of Gear reverse wheel set : 99999-03870

Part No.	Part Name	Q'ty
3B4-17432-01	AXLE, IDEL	1
16B-17243-00	GEAR, REVERSE WHEEL	1
90201-15029	WASHER, PLATE	1
93310-31576	BEARING	1
90387-15017	COLLOR	1

2. ILLUSTRATION CORRECTION

OLD type

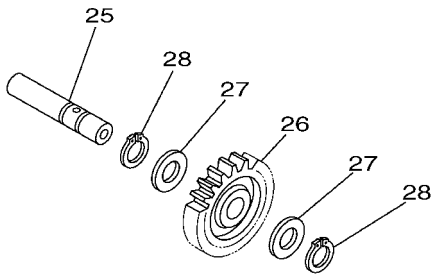

NEW type

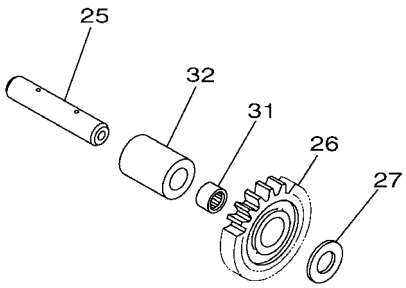

Thank you very much for your cooperation.

Parts Manager Check	Service Manager Check	Parts Manager File

YAMAHA MOTOR CO.,LTD
2500 Shingai Iwata Shizuoka 438-8501.Japan
Technical Publication Dept.

YAMAHA GENUINE Parts & Accessories

PARTS NEWS

YAMAHA
YAMAHA MOTOR CO., LTD.
2500 SHINGAI IWATA SHIZUOKA JAPAN

Date: Apr./28/2009

News No. PE0-MC-090023 2/2

Signature: M.Saito

Cause ☑ Revision Notice ☐ Correction ☐ Sales Unit Change ☐ Others

Model	See the"List of Models and CATALOGUE No's below."
Subject	PARTS CATALOGUE CORRECTIONS
CATALOGUE NO.	See the"List of Models and CATALOGUE No's below."

Time of YPEC Revision Text, Illustration --> May./20/2009 PDF Replace --> May./20/2009
(YPEC = Yamaha Parts Electrical Catalogue = Website parts catalogue)

3. LIST of Models and CATALOG No's

MODEL YEAR	MODEL NAME	MODEL CODE	CATALOG No.
2007	YFM7FGPW	3B41 / 3B42	1F3B4-100E1
2007	YFM7FGPW	3B43 / 3B44	1F3B4-300E1
2007	YFM7FGPW	3B45 / 3B46 / 3B47	1F3B4-100EA
2007	YFM7FGPW	3B48	1F3B4-110E1
2007	YFM7FGPW	3B4A / 3B4B / 3B4C / 3B4D	1F3B4-100EK
2008	YFM7FGPX	3B49 / 3B4E / 3B4F / 3B4G	1G3B4-100E1
2008	YFM7FGPX	3B4H / 3B4J / 3B4K	1G3B4-100EA
2008	YFM7FGPX	3B4L	1G3B4-110E1
2008	YFM7FGPX	3B4M / 3B4N / 3B4P / 3B4R	1G3B4-100EK
2008	YFM7FGPX	3B4S	1G3B4-171E1
2008	YFM7FGPX	3B4T	1G3B4-171EA
2008	YFM7FGX	5C01 / 5C02 / 5C04	1G5C0-100E1
2008	YFM7FGX	5C05 / 5C06	1G5C0-100EA
2009	YFM7FGPY	43P1	1H43P-110E1
2009	YFM7FGPY	43P2 / 43P3 / 43P4	1H43P-100E1
2009	YFM7FGPY	43P5	1H43P-110EA
2009	YFM7FGPY	43P6 / 43P7	1H43P-100EA
2009	YFM7FGPY	43P8	1H43P-110EK
2009	YFM7FGPY	43P9	1H43P-171E1
2009	YFM7FGPY	43PA	1H43P-110EY
2009	YFM7FGPY	43PB / 43PC / 43PD	1H43P-100EK
2009	YFM7FGPY	43PE / 43PF	1H43P-100EY
2009	YFM7FGY	5C0A	1H5C0-110E1
2009	YFM7FGY	5C0B	1H5C0-171E1
2009	YFM7FGY	5C0C	1H5C0-110EA
2009	YFM7FGY	5C0D	1H5C0-171EA
2009	YFM5FGY	28P1	1H28P-110E1
2009	YFM5FGY	28P2 / 28P3 / 28P4	1H28P-100E1
2009	YFM5FGY	28P5	1H28P-110EA
2009	YFM5FGY	28P6	1H28P-171E1
2009	YFM5FGY	34D1	1H34D-110E1
2009	YFM5FGPY	34D2 / 34D3 / 34D4	1H34D-100E1
2009	YFM5FGPY	34D5	1H34D-110E1
2009	YFM5FGPY	34D6 / 34D7	1H34D-100EA
2009	YFM5FGPSEY	34D8	1H34D-110EK
2009	YFM5FGPSEY	34D9 / 34DA / 34DB	1H34D-100EK

Thank you very much for your cooperation.

Parts Manager Check	Service Manager Check	Parts Manager File

YAMAHA MOTOR CO.,LTD
2500 Shingai Iwata Shizuoka 438-8501.Japan
Technical Publication Dept.

YAMAHA GENUINE Parts & Accessories

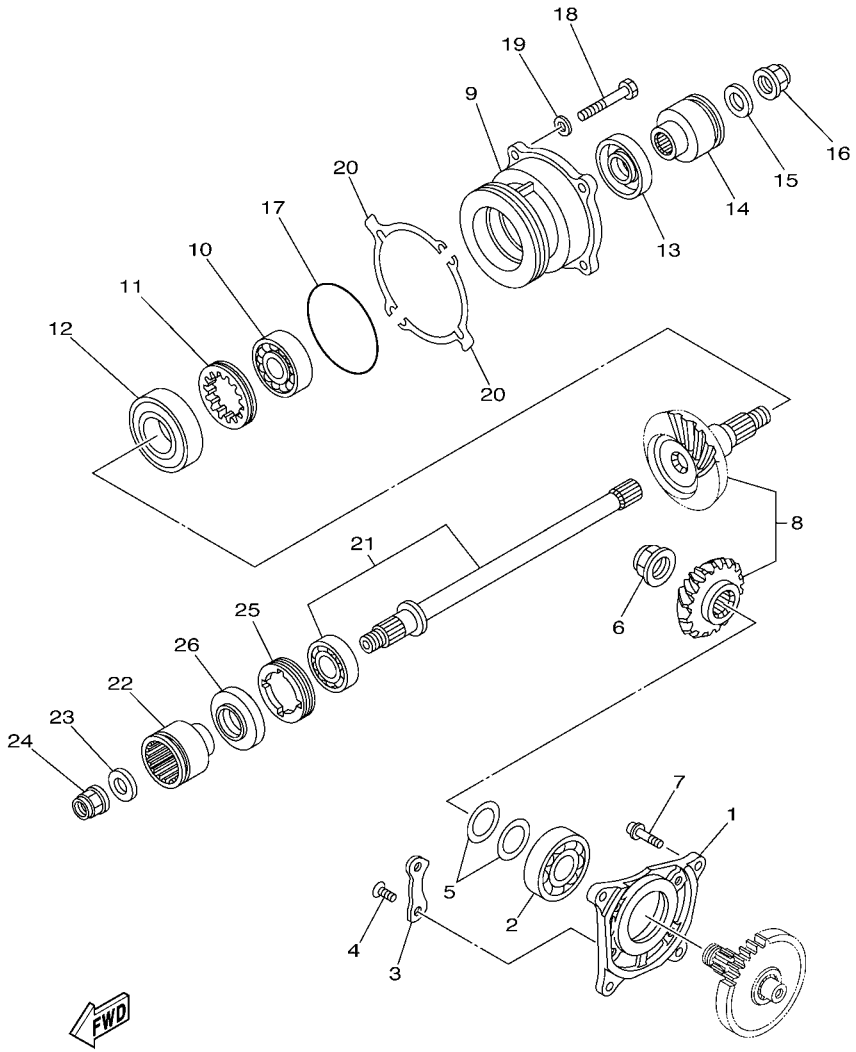

3B49100-G170

FIG. 17 MIDDLE DRIVE GEAR

REF. NO.	PART NO.	DESCRIPTION	USA	CAN	EUR	OCE		REMARKS
1	3B4–17521–00	HOUSING, BEARING	1	1	1	1		
2	93306–30537	BEARING	1	1	1	1		
3	11H–15383–02	PLATE, BEARING COVER	2	2	2	2		
4	90149–08013	SCREW	4	4	4	4		
5	5KM–17531–50	SHIM, PINION (0.5T)	2	2	2	2		UR
	5KM–17531–60	SHIM, PINION (0.55T)	2	2	2	2		UR
	5KM–17531–70	SHIM, PINION (0.6T)	2	2	2	2		UR
	5KM–17531–80	SHIM, PINION (0.7T)	2	2	2	2		UR
	5KM–17531–90	SHIM, PINION (0.8T)	2	2	2	2		UR
	5KM–17531–A0	SHIM, PINION (0.9T)	2	2	2	2		UR
	5KM–17531–B0	SHIM, PINION (1.0T)	2	2	2	2		UR
6	90179–22013	NUT	1	1	1	1		
7	90110–08091	BOLT, HEXAGON SOCKET HEAD	4	4	4	4		
8	3B4–17530–00	PINION SET	1	1	1	1		
9	3B4–17551–00	HOUSING, BEARING	1	1	1	1		
10	93306–37206	BEARING	1	1	1	1		
11	90179–60001	NUT	1	1	1	1		
12	93306–20654	BEARING	1	1	1	1		
13	93102–30010	OIL SEAL	1	1	1	1		
14	3B4–17832–00	COUPLING	1	1	1	1		
15	90201–16021	WASHER, PLATE	1	1	1	1		
16	90179–16006	NUT	1	1	1	1		
17	93210–78544	O-RING	1	1	1	1		
18	97022–08030	BOLT	4	4	4	4		
19	92902–08600	WASHER, PLATE	4	4	4	4		
20	3B4–17531–00	SHIM, PINION (0.1T)	2	2	2	2		UR
	3B4–17531–10	SHIM, PINION (0.15T)	2	2	2	2		UR

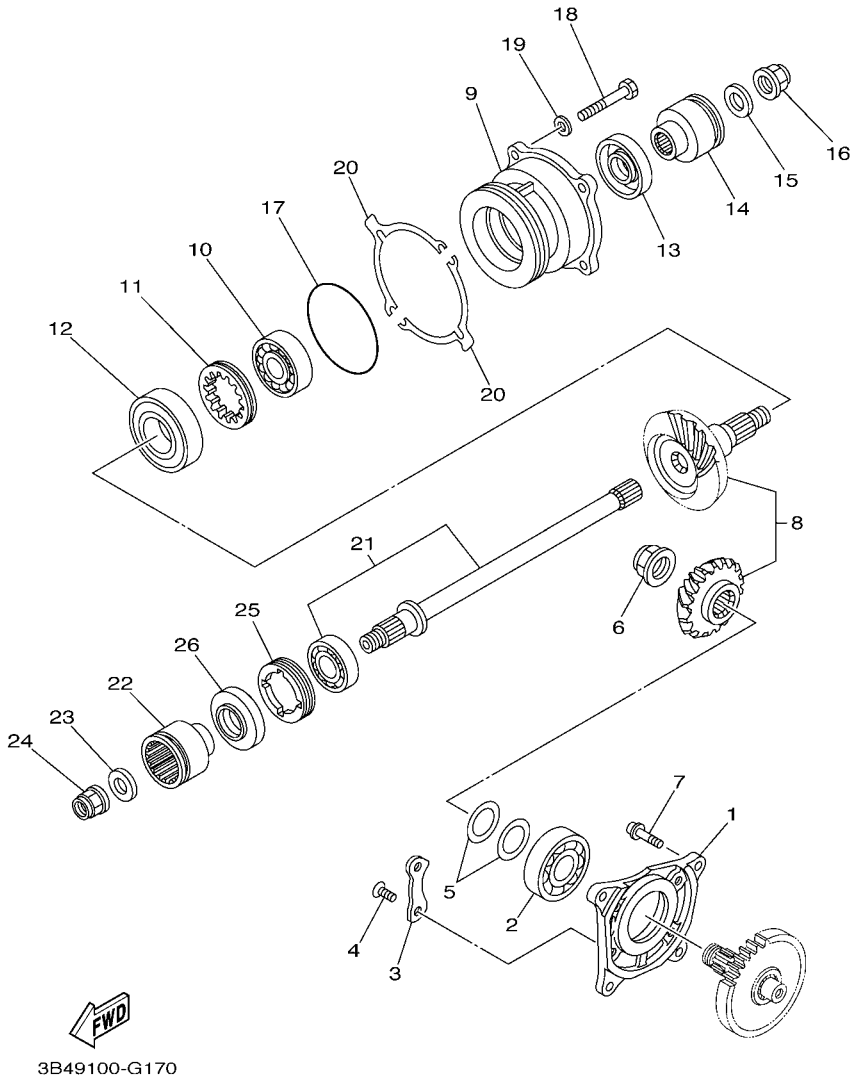

FIG. 17 MIDDLE DRIVE GEAR

REF. NO.	PART NO.	DESCRIPTION	USA	CAN	EUR	OCE		REMARKS
20	3B4–17531–20	SHIM, PINION (0.2T)	2	2	2	2		UR
	3B4–17531–30	SHIM, PINION (0.3T)	2	2	2	2		UR
	3B4–17531–40	SHIM, PINION (0.4T)	2	2	2	2		UR
	3B4–17531–50	SHIM, PINION (0.5T)	2	2	2	2		UR
	3B4–17531–60	SHIM, PINION (0.6T)	2	2	2	2		UR
21	3B4–1755A–00	MIDDLE DRIVEN SHAFT ASSY	1	1	1	1		
22	3B4–17832–00	COUPLING	1	1	1	1		
23	90201–16021	WASHER, PLATE	1	1	1	1		
24	90179–16006	NUT	1	1	1	1		
25	90179–55660	NUT	1	1	1	1		
26	93102–30010	OIL SEAL	1	1	1	1		

FIG. 18 SHIFT CAM & FORK

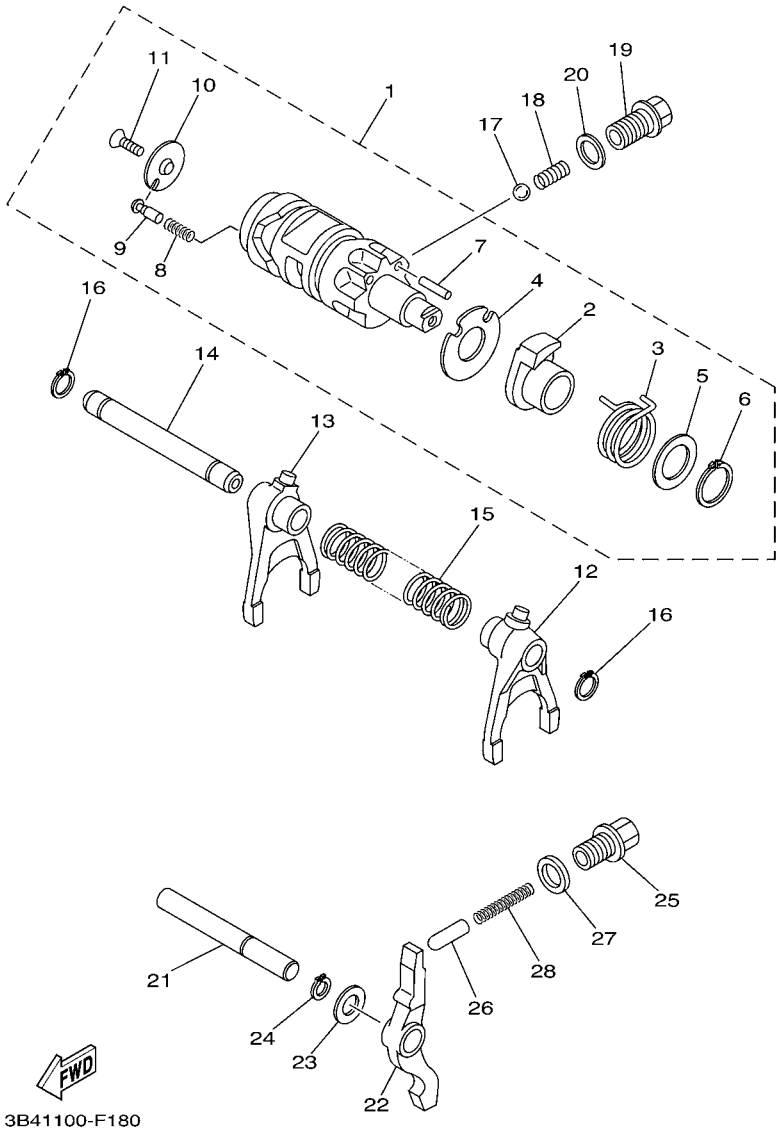

REF. NO.	PART NO.	DESCRIPTION	USA	CAN	EUR	OCE		REMARKS
1	3B4–18540–00	SHIFT CAM ASSY	1	1	1	1		
2	5KM–18171–00	.CAM, LEVER	1	1	1	1		
3	90508–32018	.SPRING, TORSION	1	1	1	1		
4	3B4–18331–00	.PLATE, SHIFT CAM	1	1	1	1		
5	90201–20792	.WASHER, PLATE	1	1	1	1		
6	93410–20038	.CIRCLIP	1	1	1	1		
7	93604–18100	.PIN, DOWEL	1	1	1	1		
8	90501–06022	.SPRING, COMPRESSION	1	1	1	1		
9	5KM–18542–00	.POINT, NEUTRAL	1	1	1	1		
10	4UN–18566–00	.PLATE, SIDE 2	1	1	1	1		
11	90149–05016	.SCREW	1	1	1	1		
12	3B4–18511–00	FORK, SHIFT 1	1	1	1	1		
13	3B4–18512–00	FORK, SHIFT 2	1	1	1	1		
14	3B4–18531–00	BAR, SHIFT FORK GUIDE 1	1	1	1	1		
15	90501–140A2	SPRING, COMPRESSION	1	1	1	1		
16	99009–12400	CIRCLIP	2	2	2	2		
17	93503–08007	BALL	1	1	1	1		
18	90501–10353	SPRING, COMPRESSION	1	1	1	1		
19	90105–14003	BOLT, FLANGE	1	1	1	1		
20	90430–14194	GASKET	1	1	1	1		
21	3B4–18318–00	SHAFT, SHIFTER	1	1	1	1		
22	3B4–18148–00	LEVER, STOPPER	1	1	1	1		
23	90201–127J6	WASHER, PLATE	1	1	1	1		
24	99009–12400	CIRCLIP	1	1	1	1		
25	90109–14002	BOLT	1	1	1	1		
26	1J7–18547–00	STOPPER, CAM	1	1	1	1		
27	90430–14043	GASKET	1	1	1	1		

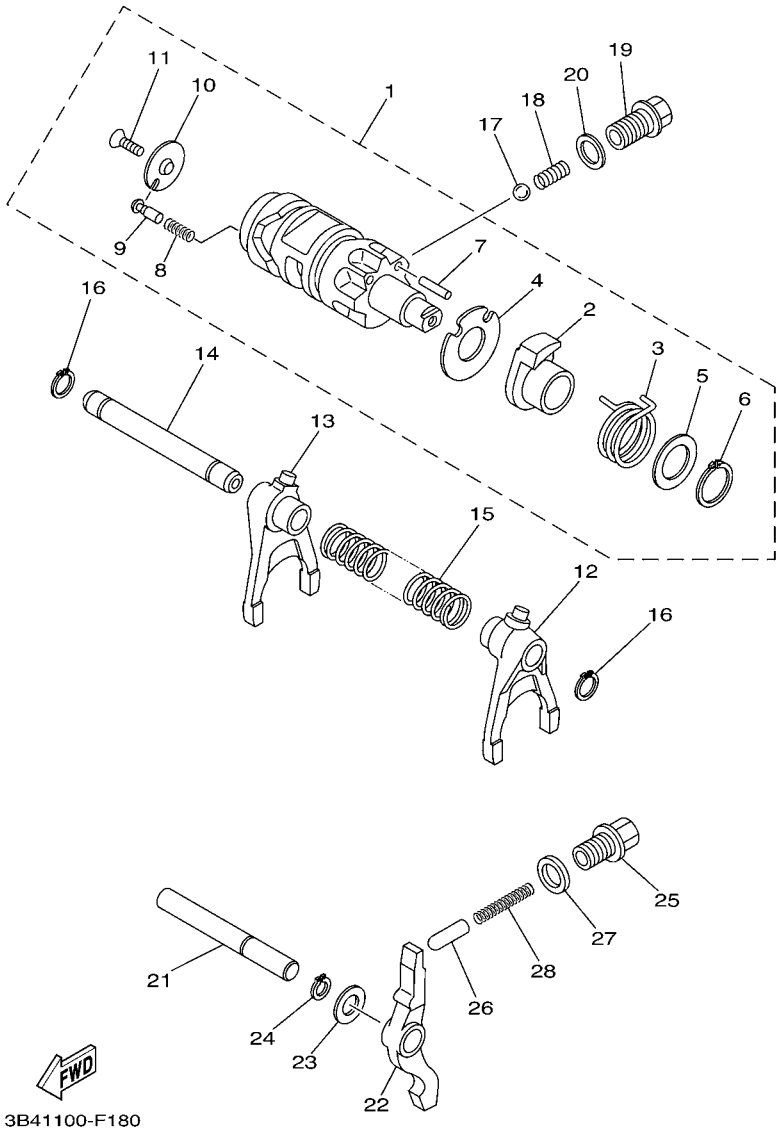

FIG. 18 SHIFT CAM & FORK

REF. NO.	PART NO.	DESCRIPTION	USA	CAN	EUR	OCE		REMARKS
28	90501–12004	SPRING, COMPRESSION	1	1	1	1		

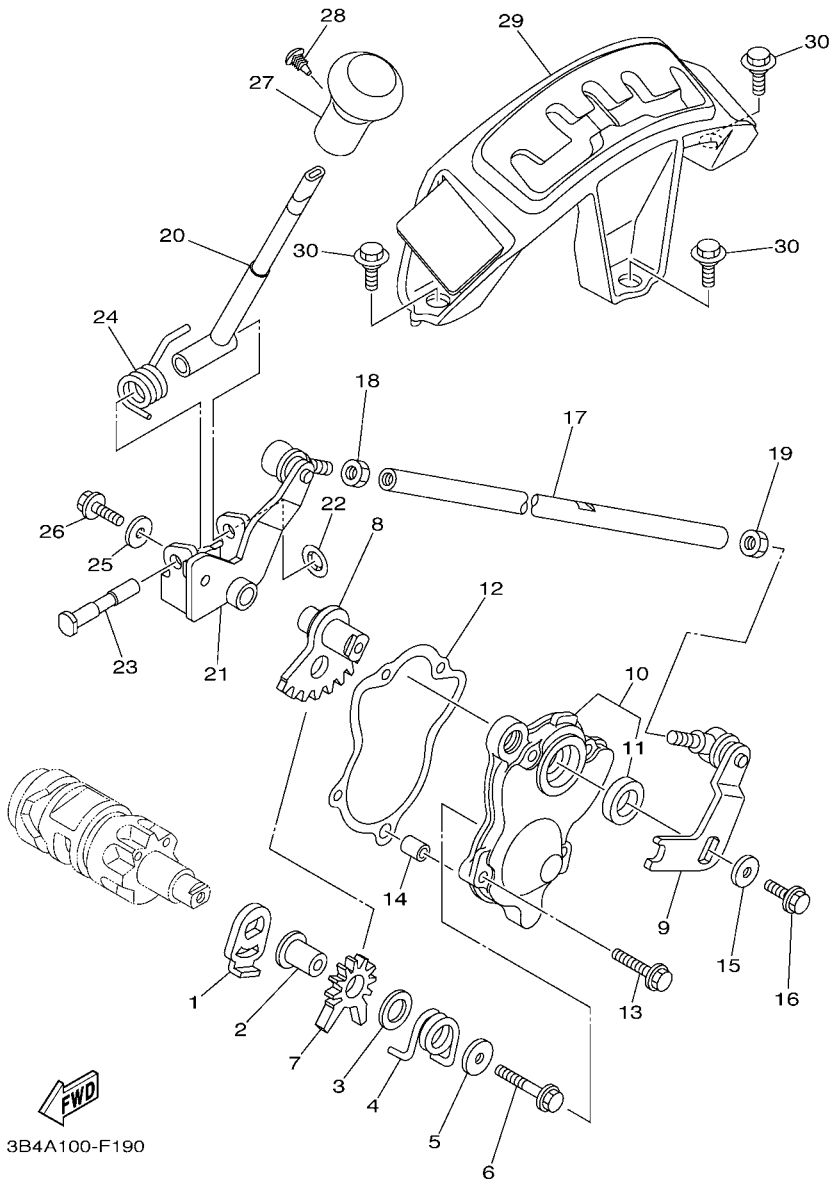

FIG. 19 SHIFT SHAFT

REF. NO.	PART NO.	DESCRIPTION	USA	CAN	EUR	OCE		REMARKS
1	4SH–18198–00	LEVER	1	1	1	1		
2	90387–0613B	COLLAR	1	1	1	1		
3	90201–132G5	WASHER, PLATE	1	1	1	1		
4	90508–35764	SPRING, TORSION	1	1	1	1		
5	90201–06036	WASHER, PLATE	1	1	1	1		
6	95812–06035	BOLT, FLANGE	1	1	1	1		
7	5KM–18191–00	LEVER	1	1	1	1		
8	3B4–18103–10	SHIFT SHAFT COMP.	1	1	1	1		
9	3B4–18104–20	SHIFT GUIDE COMP.	1	1	1	1		
10	3B4–18380–00	SHIFTER BRKT. ASSY	1	1	1	1		
11	93102–15212	.OIL SEAL	1	1	1	1		
12	3B4–18146–00	GASKET	1	1	1	1		
13	95022–06020	BOLT, FLANGE	4	4	4	4		
14	99530–08012	PIN, DOWEL	1	1	1	1		
15	90201–06036	WASHER, PLATE	1	1	1	1		
16	95812–06016	BOLT, FLANGE	1	1	1	1		
17	3B4–18115–00	ROD, SHIFT	1	1	1	1		
18	90170–08358	NUT	1	1	1	1		
19	95302–08700	NUT	1	1	1	1		
20	3B4–18190–01	LEVER COMP. 1	1	1	1	1		
21	3B4–18169–10	ARM, SHIFT 2	1	1	1	1		
22	90183–080A1	NUT, SPRING	1	1	1	1		
23	3B4–18125–00	SHAFT, SHIFT	1	1	1	1		
24	3B4–18196–00	SPRING, RETURN	1	1	1	1		
25	90201–06036	WASHER, PLATE	1	1	1	1		
26	95812–06016	BOLT, FLANGE	1	1	1	1		
27	3B4–18174–01	KNOB, SHIFT LEVER	1	1	1	1		

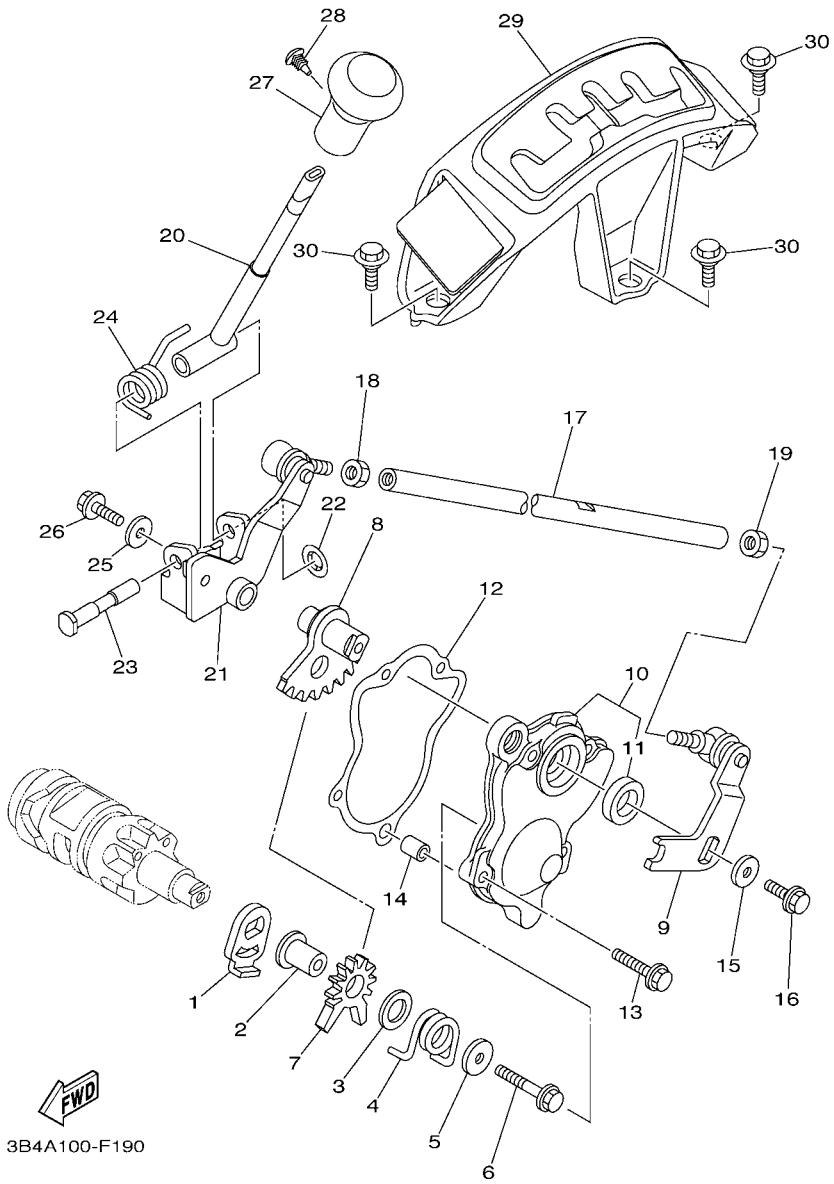

FIG. 19 SHIFT SHAFT

REF. NO.	PART NO.	DESCRIPTION	USA	CAN	EUR	OCE		REMARKS
28	90269–05055	RIVET	1	1	1	1		
29	3B4–18160–00	SHIFT GUIDE ASSY	1	1	1	1		
30	90109–06172	BOLT	3	3	3	3		

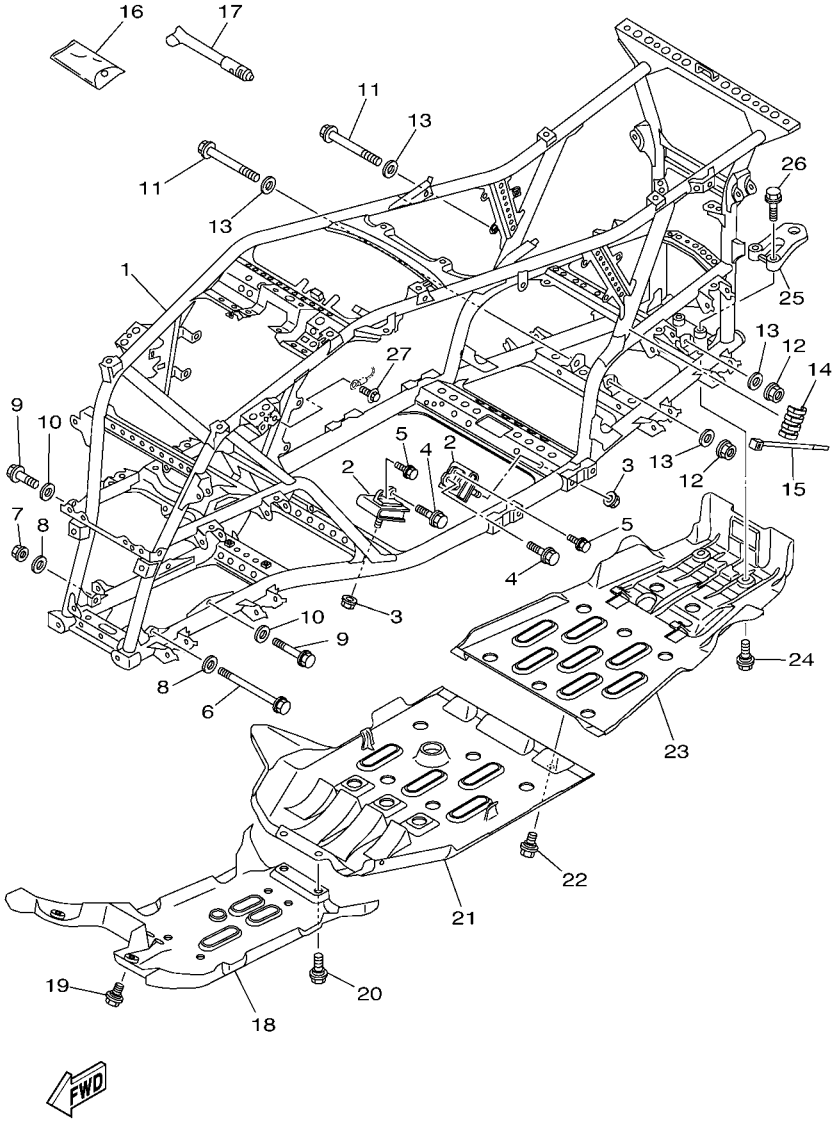

FIG. 20 FRAME

REF. NO.	PART NO.	DESCRIPTION	USA	CAN	EUR	OCE		REMARKS
1	3B4–21110–20	FRAME COMP.	1	1				
	3B4–21110–30	FRAME COMP.			1	1		
2	3B4–21485–00	DAMPER, RUBBER 1	4	4	4	4		
3	95602–10200	NUT, U FLANGE	4	4	4	4		
4	95812–10035	BOLT, FLANGE	4	4	4	4		
5	90105–06639	BOLT, FLANGE	4	4	4	4		
6	90105–10219	BOLT, FLANGE	1	1	1	1		
7	90185–10011	NUT, SELF-LOCKING	1	1	1	1		
8	90201–10035	WASHER, PLATE	2	2	2	2		
9	90105–10237	BOLT, FLANGE	2	2	2	2		
10	90201–10035	WASHER, PLATE	2	2	2	2		
11	90105–10238	BOLT, FLANGE	2	2	2	2		
12	90185–10011	NUT, SELF-LOCKING	2	2	2	2		
13	90201–10035	WASHER, PLATE	4	4	4	4		
14	3B4–2113B–00	DAMPER	1	1	1	1		
15	90464–35132	CLAMP	1	1	1	1		
16	5TG–28100–00	TOOL KIT	1	1	1	1		
17	1NV–2811A–01	GAUGE, AIR	1	1	1	1		
18	3B4–2147A–00	GUARD, ENGINE 1	1	1	1	1		
19	90109–06202	BOLT	2	2	2	2		
20	90109–06214	BOLT	2	2	2	2		
21	3B4–2147E–00	GUARD, ENGINE 2	1	1	1	1		
22	90109–06214	BOLT	2	2	2	2		
23	3B4–2147F–00	GUARD, ENGINE 3	1	1	1	1		
24	90109–06202	BOLT	2	2	2	2		
25	3B4–28488–00	HOOK	1	1	1			
	3B4–28488–10	HOOK				1		

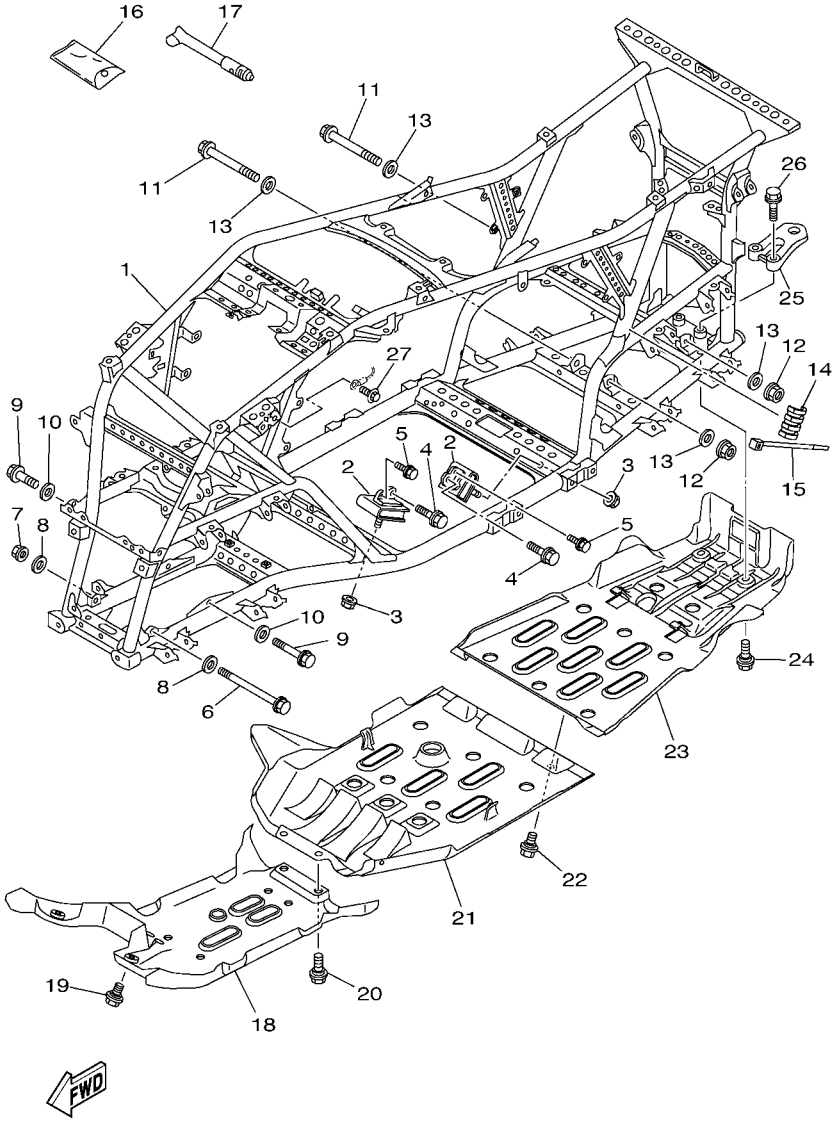

FIG. 20 FRAME

REF. NO.	PART NO.	DESCRIPTION	USA	CAN	EUR	OCE		REMARKS
26	95812–10035	BOLT, FLANGE	2	2	2	2		
27	95802–06012	BOLT, FLANGE	1	1	1	1		

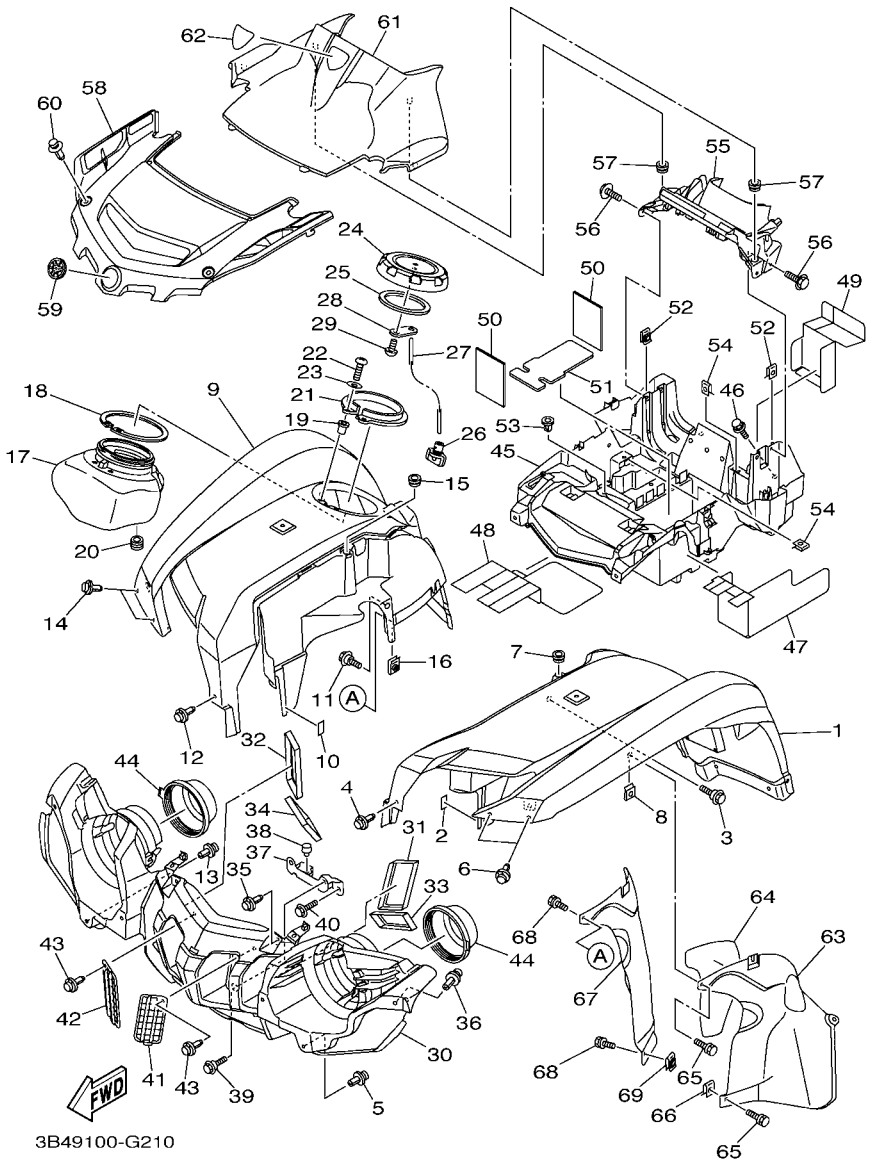

FIG. 21 FRONT FENDER

REF. NO.	PART NO.	DESCRIPTION	USA	CAN	EUR	OCE		REMARKS
1	3B4–W2151–E0	FRONT FENDER COMP.	1					
	3B4–W215C–E0	FRONT FENDER COMP.2		1				
	3B4–W215B–E0	FRONT FENDER COMP. 2			1			
	3B4–W215E–E0	FRONT FENDER COMP.				1		
2	3B4–21541–00	DAMPER 1	1	1	1	1		
3	90109–06172	BOLT	1	1	1	1		
4	90269–07012	RIVET	1	1	1	1		
5	90269–07077	RIVET	1	1	1	1		
6	90269–07012	RIVET	2	2	2	2		
7	90480–13398	GROMMET	1	1	1	1		
8	90183–06053	NUT, SPRING	1	1	1	1		
9	3B4–21556–E0	FENDER, FRONT 2	1		1	1		
	3B4–W215D–E0	FRONT FENDER COMP. 2		1				
10	3B4–21541–00	DAMPER 1	1	1	1	1		
11	90109–06172	BOLT	1	1	1	1		
12	90269–07012	RIVET	1	1	1	1		
13	90269–07077	RIVET	1	1	1	1		
14	90269–07012	RIVET	2	2	2	2		
15	90480–13398	GROMMET	1	1	1	1		
16	90183–06053	NUT, SPRING	1	1	1	1		
17	3B4–2838K–00	BOX 1	1	1	1	1		
18	3B4–2838M–00	SEAL, BOX 1	1	1	1	1		
19	90179–05523	NUT	2	2	2	2		
20	90480–13004	GROMMET	1	1	1	1		
21	3B4–2839N–00	HOLDER	1	1	1	1		
22	98502–05016	SCREW, PAN HEAD	2	2	2	2		
23	92902–05600	WASHER, PLATE	2	2	2	2		

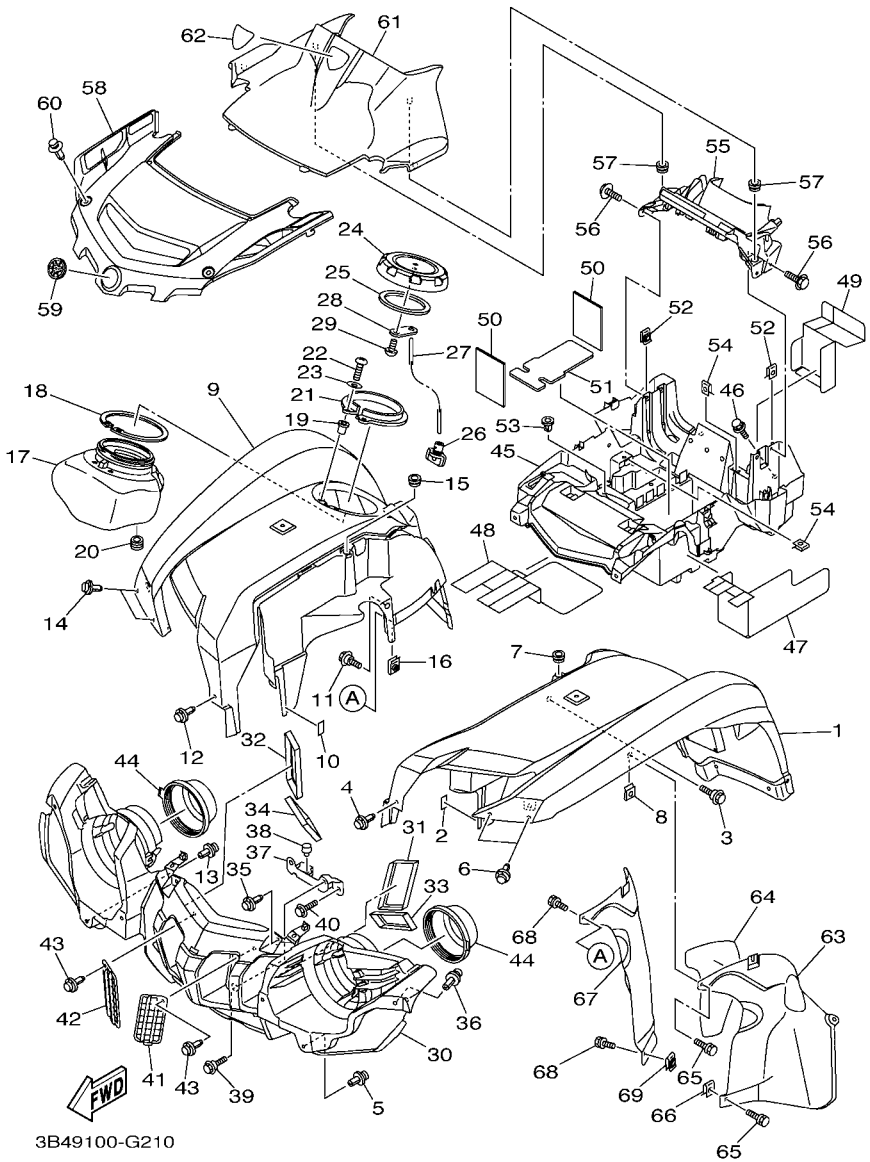

FIG. 21 FRONT FENDER

REF. NO.	PART NO.	DESCRIPTION	USA	CAN	EUR	OCE		REMARKS
24	3B4–2151B–00	CAP	1	1	1	1		
25	3B4–28307–00	SEAL	1	1	1	1		
26	3B4–215A1–00	PLUG, DRAIN	1	1	1	1		
27	3B4–2845L–00	STOPPER, OPEN	1	1	1	1		
28	3B4–28487–00	PLATE 2	1	1	1	1		
29	97702–50512	SCREW, TAPPING	1	1	1	1		
30	3B4–28309–00	GRILLE, FRONT	1	1	1	1		
31	3B4–28217–00	DAMPER 1	1	1	1	1		
32	3B4–28227–00	DAMPER 2	1	1	1	1		
33	3B4–28237–00	DAMPER 3	1	1	1	1		
34	3B4–28247–00	DAMPER 4	1	1	1	1		
35	90269–07010	RIVET	2	2	2	2		
36	90269–07077	RIVET	2	2	2	2		
37	3B4–28332–00	STAY, LEG SHIELD	1	1	1	1		
38	5RU–24768–00	STOPPER	2	2	2	2		
39	90109–06172	BOLT	2	2	2	2		
40	95802–06012	BOLT, FLANGE	2	2	2	2		
41	3B4–2837N–00	GRILL, AIR INTAKE 1	1	1	1	1		
42	3B4–2837R–00	GRILL, AIR INTAKE 2	1	1	1	1		
43	90269–07077	RIVET	2	2	2	2		
44	3B4–28349–00	CAP	2	2	2	2		
45	3B4–21523–00	PLATE 1	1	1	1	1		
46	90119–06152	BOLT, WITH WASHER	3	3	3	3		
47	3B4–8253E–10	INSULATOR 1	1	1	1	1		
48	3B4–8253F–10	INSULATOR 2	1	1	1	1		
49	3B4–8254E–10	INSULATOR	1	1	1	1		
50	3B4–8233W–10	INSU.	2	2	2	2		

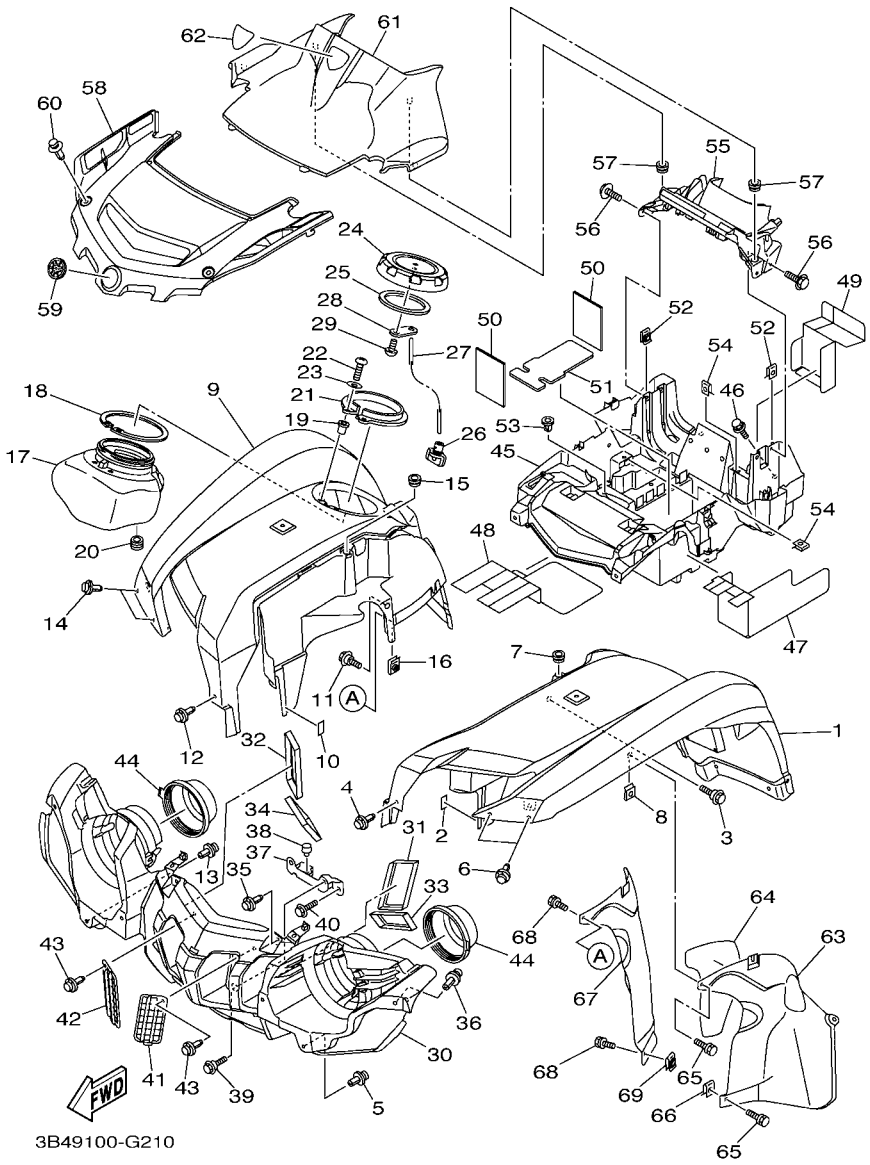

FIG. 21 FRONT FENDER

REF. NO.	PART NO.	DESCRIPTION	USA	CAN	EUR	OCE		REMARKS
51	3B4–82122–00	SEAT, BATTERY	1	1	1	1		
52	90183–06053	NUT, SPRING	4	4	4	4		
53	90338–08226	PLUG	2	2	2	2		
54	90183–05008	NUT, SPRING	2	2	2	2		
55	3B4–2837L–00	PANEL, CONSOLE 1	1	1	1	1		
56	90119–06152	BOLT, WITH WASHER	4	4	4	4		
57	90480–13567	GROMMET	2	2	2	2		
58	3B4–23391–00	PANEL, FRONT	1	1	1	1		
59	5KM–2175B–00	TUNING FORK MARK	1	1	1	1		
60	90269–07010	RIVET	2	2	2	2		
61	3B4–28313–00	LID	1	1	1	1		
62	3B4–26232–00	EMBLEM 3D	1	1	1	1		
63	3B4–21552–00	FENDER, INNER	1	1	1	1		
64	3B4–21575–10	SEAL 1	1	1	1	1		
65	90119–06152	BOLT, WITH WASHER	2	2	2	2		
66	90183–06053	NUT, SPRING	1	1	1	1		
67	3B4–21553–00	FENDER, INNER 2	1	1	1	1		
68	90119–06152	BOLT, WITH WASHER	3	3	3	3		
69	90183–06053	NUT, SPRING	2	2	2	2		

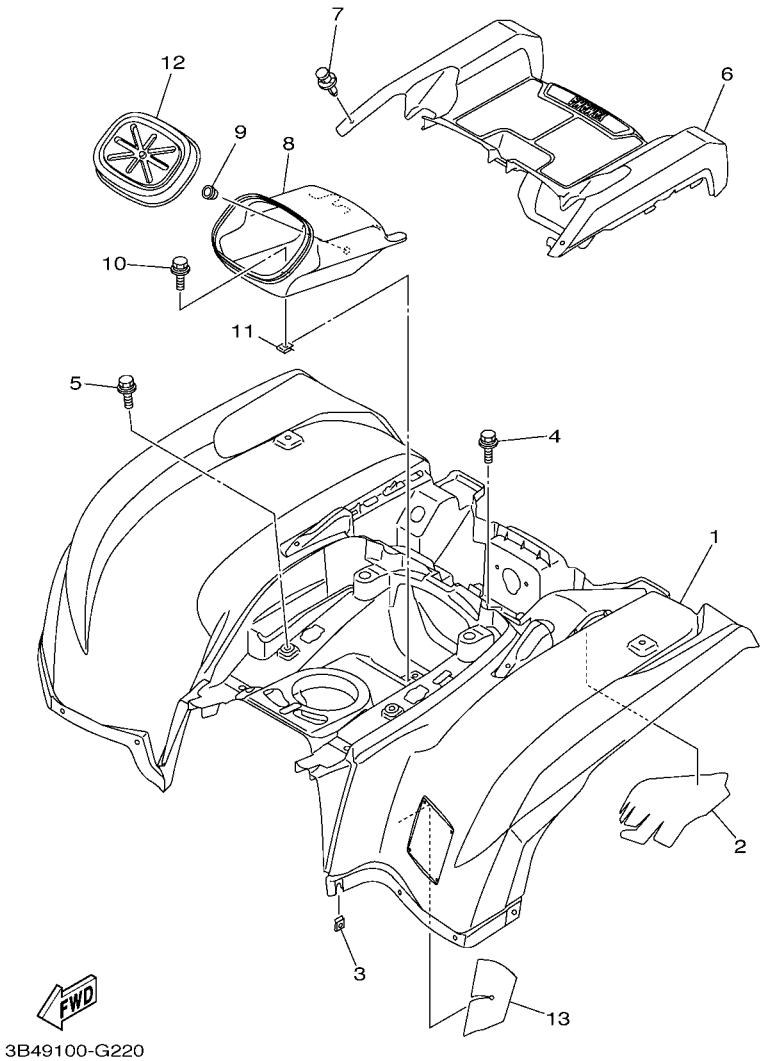

FIG. 22 REAR FENDER

REF. NO.	PART NO.	DESCRIPTION	USA	CAN	EUR	OCE		REMARKS
1	3B4–W2161–E0	REAR FENDER COMP.	1					
	3B4–W216C–E0	REAR FENDER COMP.2		1				
	3B4–W216B–E0	REAR FENDER COMP.2			1			
	3B4–W216E–E0	REAR FENDER COMP.				1		
2	3B4–21652–00	PROTECTOR	1	1	1	1		
3	90183–06053	NUT, SPRING	1	1	1	1		
4	90119–06152	BOLT, WITH WASHER	2	2	2	2		
5	90119–06152	BOLT, WITH WASHER	2	2	2	2		
6	3B4–21651–00	COVER, REAR FENDER	1	1	1	1		
7	90269–07010	RIVET	2	2	2	2		
8	3B4–2160E–00	BOX	1	1	1	1		
9	90338–09130	PLUG	1	1	1	1		
10	90119–06152	BOLT, WITH WASHER	1	1	1	1		
11	90183–06053	NUT, SPRING	1	1	1	1		
12	3B4–2160F–00	LID	1	1	1	1		
13	3B4–21669–00	SEAL	1	1	1	1		

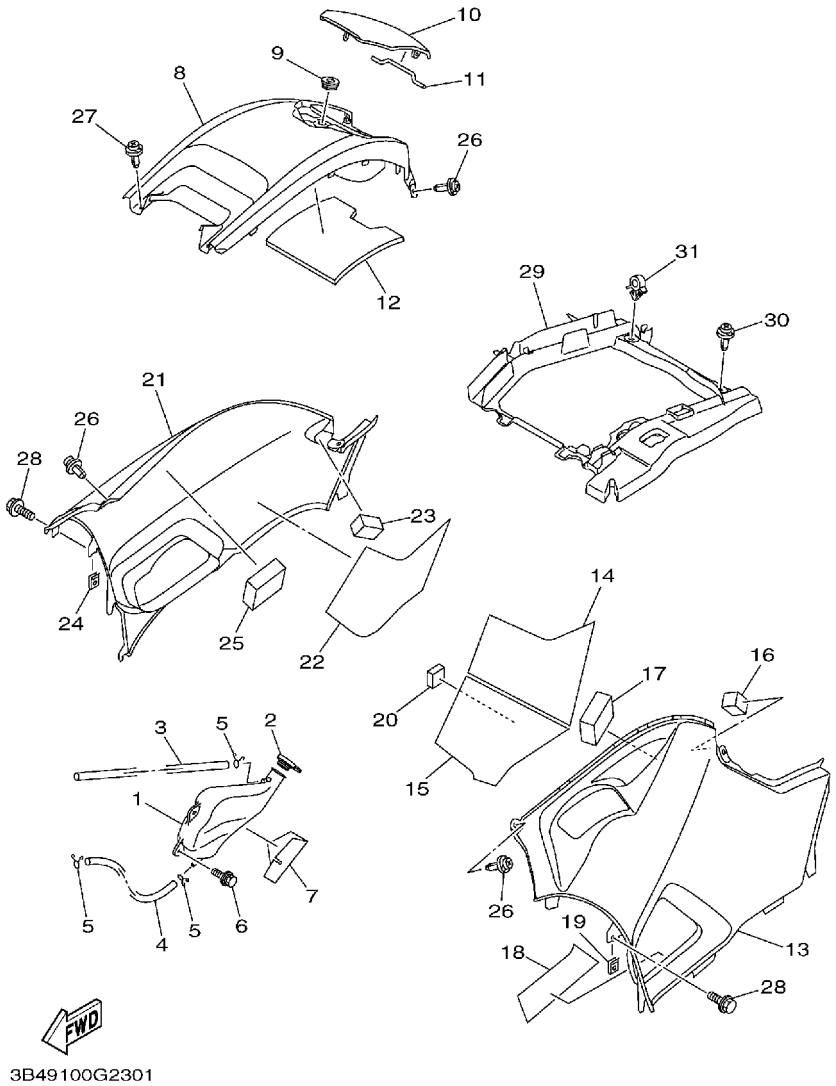

FIG. 23 SIDE COVER

REF. NO.	PART NO.	DESCRIPTION	USA	CAN	EUR	OCE		REMARKS
1	3B4–21871–00	TANK, RECOVERY	1	1	1	1		
2	1S3–21875–00	CAP	1	1	1	1		
3	90445–09117	HOSE (L540)	1	1	1	1		
4	90445–09110	HOSE (L420)	1	1	1	1		
5	90467–08003	CLIP	3	3	3	3		
6	90119–06152	BOLT, WITH WASHER	2	2	2	2		
7	3B4–2176E–00	PLATE	1	1	1	1		
8	3B4–2171A–00	COVER, TOP	1	1	1	1		
9	90480–01558	GROMMET	1	1	1	1		
10	3B4–2177B–00	LID, COVER	1	1	1	1		
11	3B4–2177K–00	PIN, HINGE	1	1	1	1		
12	3B4–21747–00	DAMPER	1	1	1	1		
13	3B4–21711–E0	COVER, SIDE 1	1	1	1	1		
14	3B4–2174A–00	INSULATOR, SIDE COVER	1	1	1	1		
15	3B4–2173N–00	SEAL 4	1	1	1	1		
16	3B4–21717–00	DAMPER	1	1	1	1		
17	3B4–2174Y–00	DAMPER	1	1	1	1		
18	3B4–2173M–00	SEAL 3	1	1	1	1		
19	90183–06053	NUT, SPRING	1	1	1	1		
20	3B4–2177N–00	DAMPER, LOCATING 4	1	1	1	1		
21	3B4–21721–E0	COVER, SIDE 2	1	1	1	1		
22	3B4–2174T–00	INSULATOR, SIDE COVER 2	1	1	1	1		
23	3B4–21717–00	DAMPER	1	1	1	1		
24	90183–06053	NUT, SPRING	1	1	1	1		
25	3B4–2174Y–00	DAMPER	1	1	1	1		
26	90269–07076	RIVET	4	4	4	4		
27	90269–06081	RIVET	2	2	2	2		

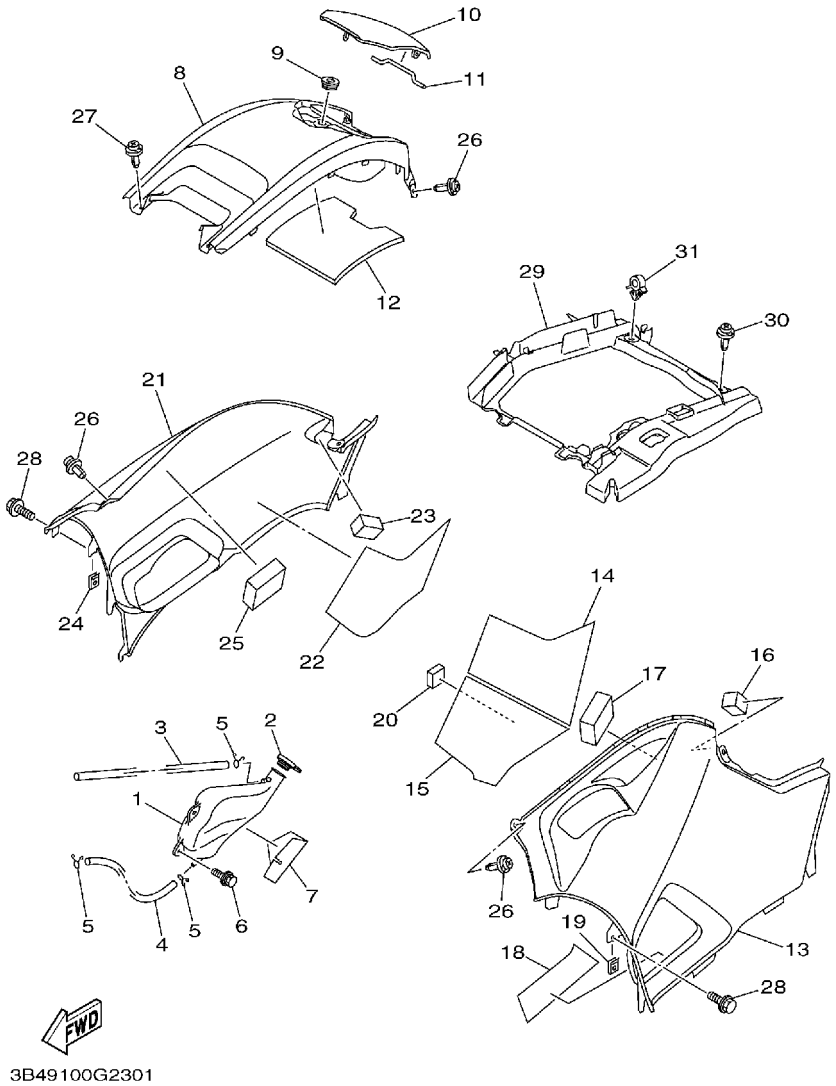

FIG. 23 SIDE COVER

REF. NO.	PART NO.	DESCRIPTION	USA	CAN	EUR	OCE		REMARKS
28	90119–06152	BOLT, WITH WASHER	2	2	2	2		
29	3B4–2414H–00	DAMPER, PLATE 1	1	1	1	1		
30	90269–07010	RIVET	1	1	1	1		
31	90464–16012	CLAMP	1	1	1	1		

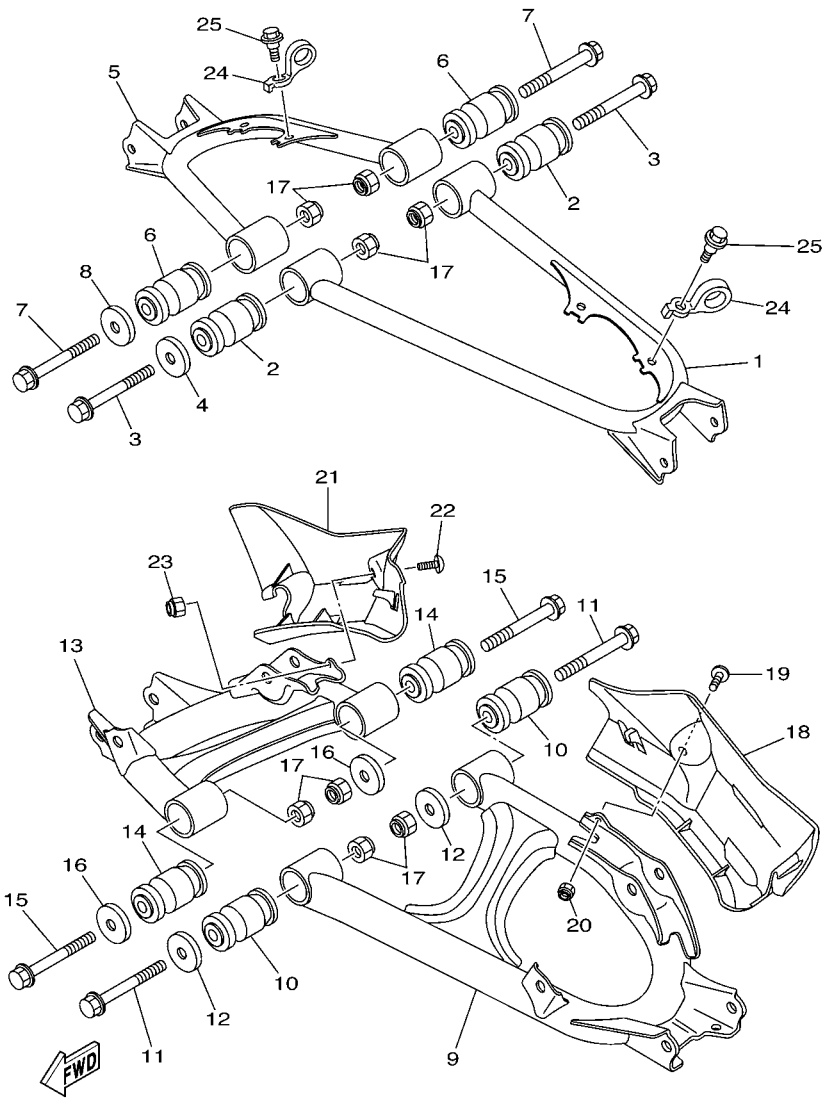

3B41100-F240

FIG. 24 REAR ARM

REF. NO.	PART NO.	DESCRIPTION	USA	CAN	EUR	OCE		REMARKS
1	3B4–22171–00	ARM, REAR 1	1	1				
	3B4–22171–11	ARM, REAR 1			1	1		
2	5KM–23526–10	BUSH	2	2	2	2		
3	90105–10222	BOLT, FLANGE	2	2	2	2		
4	5KM–22149–10	WASHER	1	1	1	1		
5	3B4–22172–00	ARM, REAR 2	1	1				
	3B4–22172–11	ARM, REAR 2			1	1		
6	5KM–23526–10	BUSH	2	2	2	2		
7	90105–10222	BOLT, FLANGE	2	2	2	2		
8	5KM–22149–10	WASHER	1	1	1	1		
9	3B4–2217M–00	ARM 1	1	1				
	3B4–2217M–11	ARM 1			1	1		
10	5KM–23526–10	BUSH	2	2	2	2		
11	90105–10222	BOLT, FLANGE	2	2	2	2		
12	5KM–22149–10	WASHER	2	2	2	2		
13	3B4–2217N–00	ARM 2	1	1				
	3B4–2217N–11	ARM 2			1	1		
14	5KM–23526–10	BUSH	2	2	2	2		
15	90105–10222	BOLT, FLANGE	2	2	2	2		
16	5KM–22149–10	WASHER	2	2	2	2		
17	90185–10012	NUT, SELF-LOCKING	8	8	8	8		
18	3B4–22128–00	COVER, THRUST 1	1	1	1	1		
19	90110–06200	BOLT, HEXAGON SOCKET HEAD	1	1	1	1		
20	95702–06300	NUT, NYLON	1	1	1	1		
21	3B4–22129–00	COVER, THRUST 2	1	1	1	1		
22	90110–06200	BOLT, HEXAGON SOCKET HEAD	1	1	1	1		
23	95702–06300	NUT, NYLON	1	1	1	1		

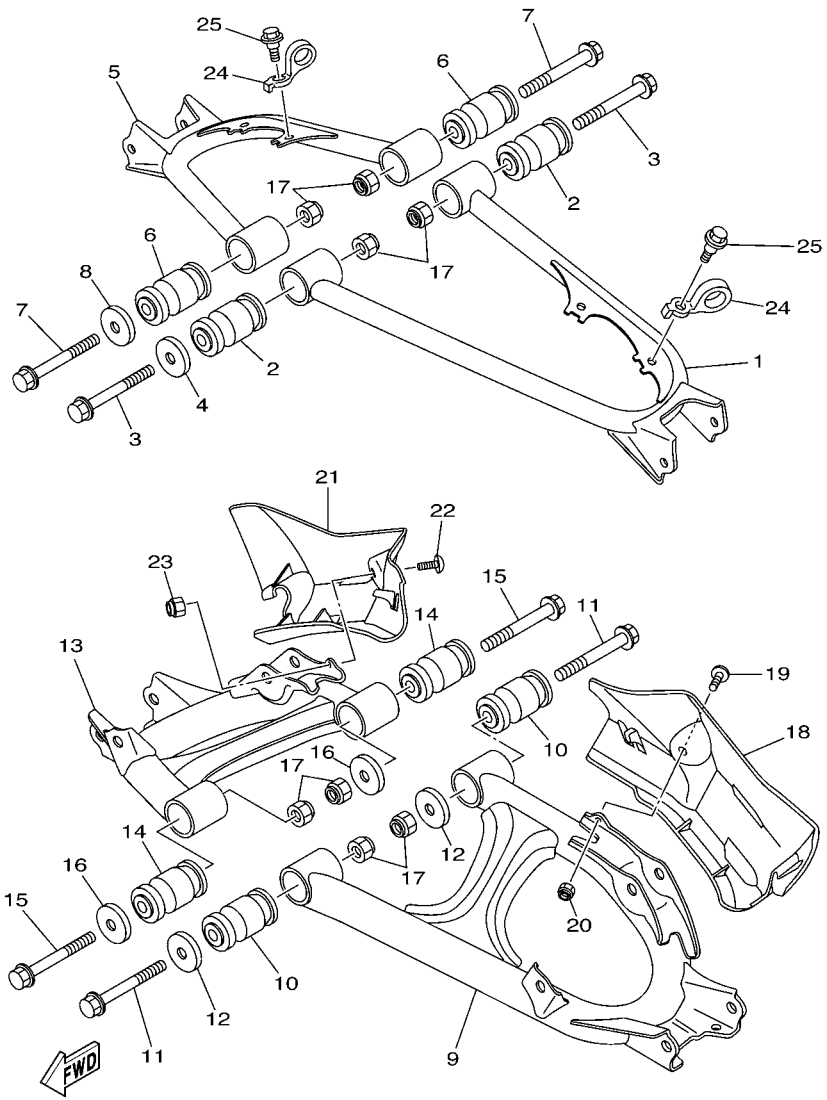

3B41100-F240

FIG. 24 REAR ARM

REF. NO.	PART NO.	DESCRIPTION	USA	CAN	EUR	OCE		REMARKS
24	3B4–25875–00	HOLDER, BRAKE HOSE 1	4	4	4	4		
25	90109–06172	BOLT	4	4	4	4		

FIG. 25 REAR SUSPENSION

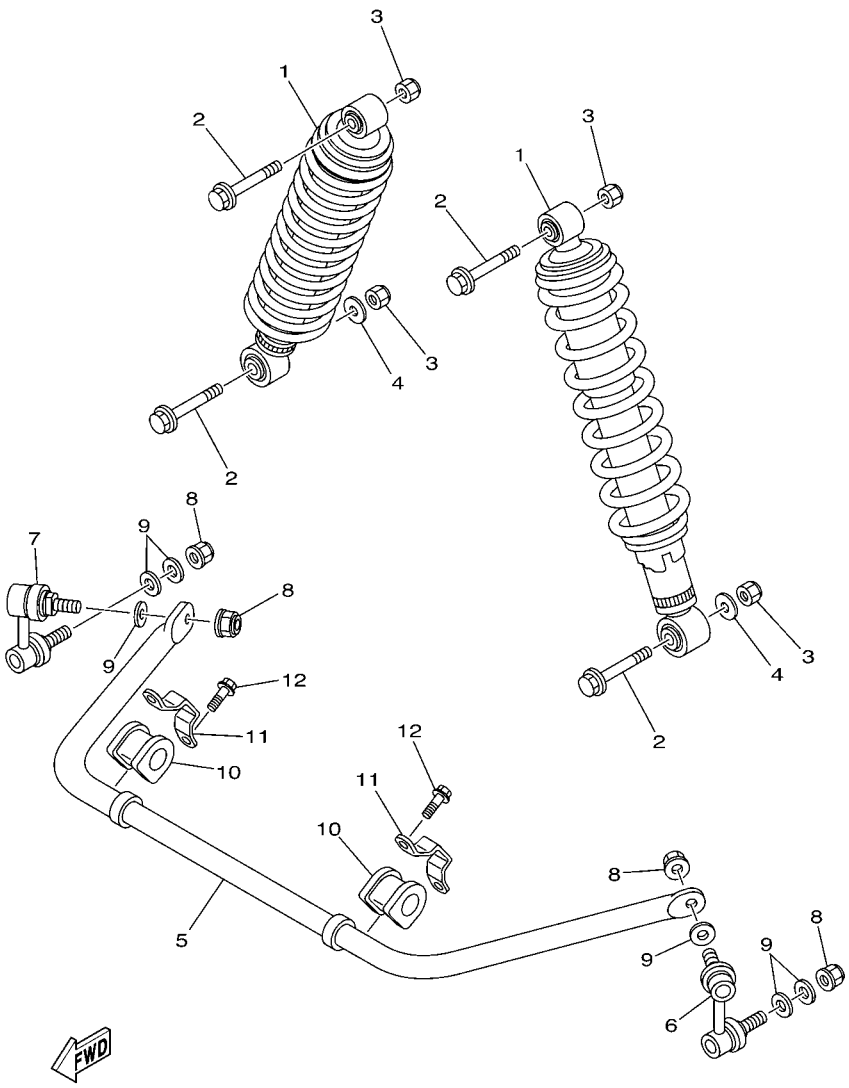

3B41100-F250

REF. NO.	PART NO.	DESCRIPTION	USA	CAN	EUR	OCE		REMARKS
1	3B4–22210–01	SHOCK ABSORBER ASSY, REAR	2	2	2	2		
2	90105–10131	BOLT, FLANGE	4	4	4	4		
3	90185–10012	NUT, SELF-LOCKING	4	4	4	4		
4	90201–10035	WASHER, PLATE	2	2	2	2		
5	3B4–47491–00	BAR, STABILIZER	1	1	1	1		
6	5KM–2385L–01	JOINT, STABILIZER 1	1	1	1	1		
7	5KM–2385M–01	JOINT, STABILIZER 2	1	1	1	1		
8	95602–10200	NUT, U FLANGE	4	4	4	4		
9	90201–10035	WASHER, PLATE	6	6	6	6		
10	3B4–2386G–00	BUSH, STABILIZER FRONT	2	2	2	2		
11	3B4–2386H–00	COVER, STABILIZER FRONT	2	2	2	2		
12	95812–08014	BOLT, FLANGE	4	4	4	4		

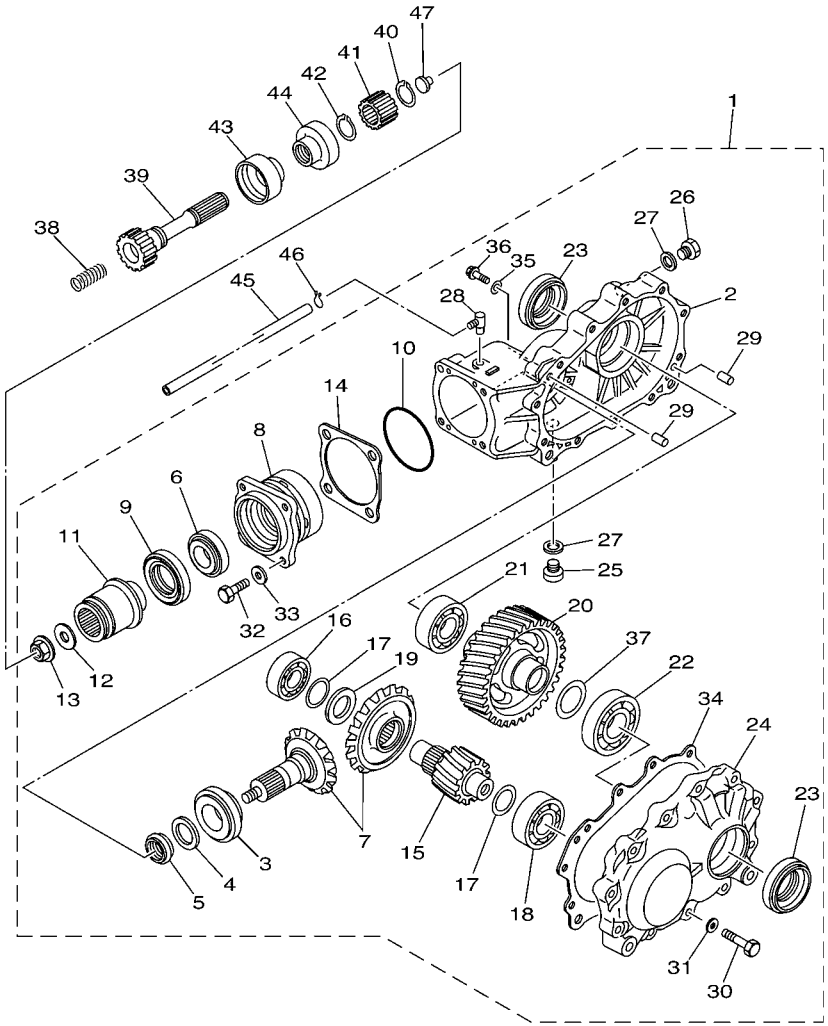

3B41100-F260

FIG. 26 DRIVE SHAFT

REF. NO.	PART NO.	DESCRIPTION	USA	CAN	EUR	OCE		REMARKS
1	3B4–46101–01	REAR AXLE GEAR CASE ASSY	1	1	1	1		
2	3B4–46151–00	.HOUSING, DRIVE SHAFT	1	1	1	1		
3	93332–00046	.BEARING	1	1	1	1		
4	90201–25634	.WASHER, PLATE	1	1	1	1		
5	3B4–46129–00	.SPACER, EXPANSION	1	1	1	1		
6	93332–00053	.BEARING	1	1	1	1		
7	3B4–461A0–00	.RING GEAR SET	1	1	1	1		
8	3B4–46144–00	.HOUSING, PINION BEARING	1	1	1	1		
9	93102–35009	.OIL SEAL	1	1	1	1		
10	93210–626A7	.O-RING	1	1	1	1		
11	3B4–46126–00	.COUPLING	1	1	1	1		
12	90201–12029	.WASHER, PLATE	1	1	1	1		
13	90179–12005	.NUT	1	1	1	1		
14	2HR–46127–00–25	.SHIM, DRIVE PISTON (0.25T)	1	1	1	1		UR
	2HR–46127–00–30	.SHIM, DRIVE PISTON (0.30T)	1	1	1	1		UR
	2HR–46127–00–35	.SHIM, DRIVE PISTON (0.35T)	1	1	1	1		UR
	2HR–46127–00–40	.SHIM, DRIVE PISTON (0.40T)	1	1	1	1		UR
	2HR–46127–00–45	.SHIM, DRIVE PISTON (0.45T)	1	1	1	1		UR
	2HR–46127–00–50	.SHIM, DRIVE PISTON (0.50T)	1	1	1	1		UR
15	3B4–46316–00	.GEAR, PINION 1	1	1	1	1		
16	93306–205U0	.BEARING	1	1	1	1		
17	3B4–46119–00	.SHIM, THRUST (0.25T)	2	2	2	2		UR
	3B4–46119–10	.SHIM, THRUST (0.30T)	2	2	2	2		UR
	3B4–46119–20	.SHIM, THRUST (0.35T)	2	2	2	2		UR
	3B4–46119–30	.SHIM, THRUST (0.40T)	2	2	2	2		UR
	3B4–46119–40	.SHIM, THRUST (0.45T)	2	2	2	2		UR
	3B4–46119–50	.SHIM, THRUST (0.50T)	2	2	2	2		UR

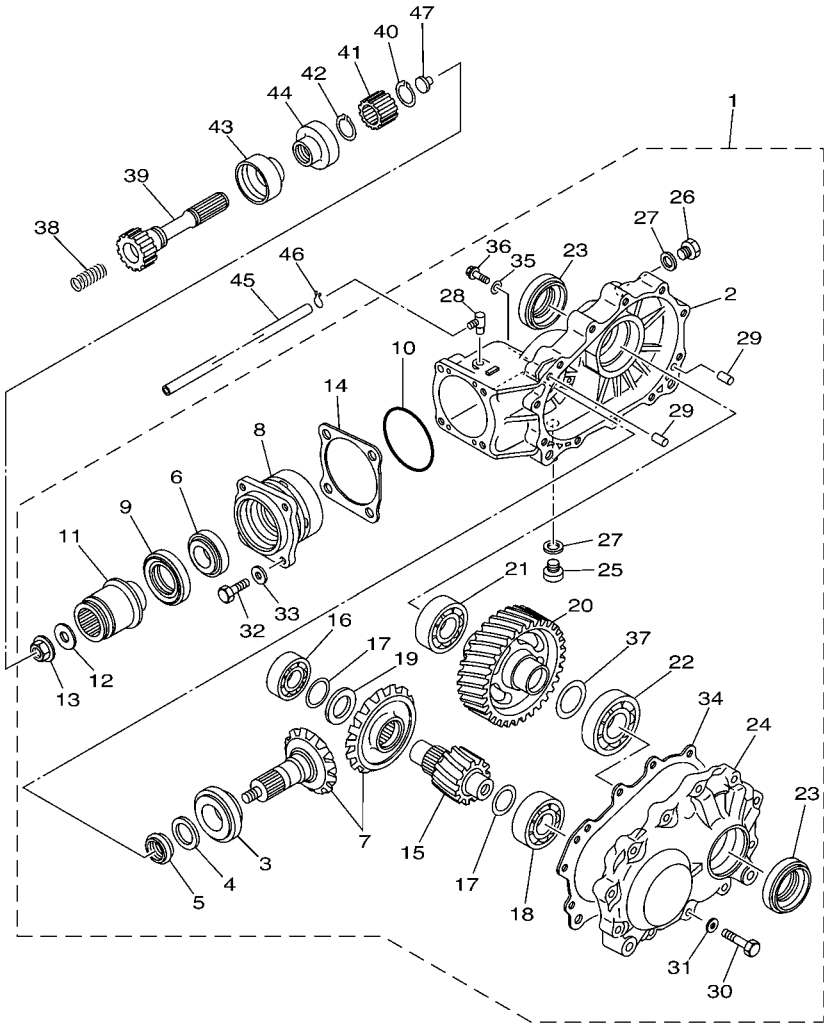

FIG. 26 DRIVE SHAFT

REF. NO.	PART NO.	DESCRIPTION	USA	CAN	EUR	OCE		REMARKS
18	93306–30523	.BEARING	1	1	1	1		
19	3B4–4621F–00	.SHIM,THRUST (4.5T)	1	1	1	1		UR
	3B4–4621F–10	.SHIM,THRUST (4.8T)	1	1	1	1		UR
	3B4–4621F–20	.SHIM,THRUST (5.1T)	1	1	1	1		UR
	3B4–4621F–30	.SHIM,THRUST (5.4T)	1	1	1	1		UR
20	3B4–46326–00	.GEAR, WHEEL 1	1	1	1	1		
21	93306–00704	.BEARING	1	1	1	1		
22	93306–207U0	.BEARING	1	1	1	1		
23	93102–35009	.OIL SEAL	2	2	2	2		
24	3B4–46152–00	.HOUSING, BEARING	1	1	1	1		
25	90340–14002	.PLUG, STRAIGHT SCREW	1	1	1	1		
26	90340–14029	.PLUG, STRAIGHT SCREW	1	1	1	1		
27	214–11198–01	.GASKET	2	2	2	2		
28	5UG–15371–00	.BREATHER	1	1	1	1		
29	99530–10014	.PIN, DOWEL	2	2	2	2		
30	97022–08035	.BOLT	11	11	11	11		
31	92902–08600	.WASHER, PLATE	11	11	11	11		
32	97022–08025	.BOLT	4	4	4	4		
33	92902–08600	.WASHER, PLATE	4	4	4	4		
34	3B4–4631A–01	.GSKT., CASE	1	1	1	1		
35	90201–08087	.WASHER, PLATE	1	1	1	1		
36	95022–08012	.BOLT, FLANGE	1	1	1	1		
37	3B4–46344–00	.SHIM (0.25T)	1	1	1	1		UR
	3B4–46344–10	.SHIM (0.30T)	1	1	1	1		UR
	3B4–46344–20	.SHIM (0.35T)	1	1	1	1		UR
	3B4–46344–30	.SHIM (0.40T)	1	1	1	1		UR
	3B4–46344–40	.SHIM (0.45T)	1	1	1	1		UR

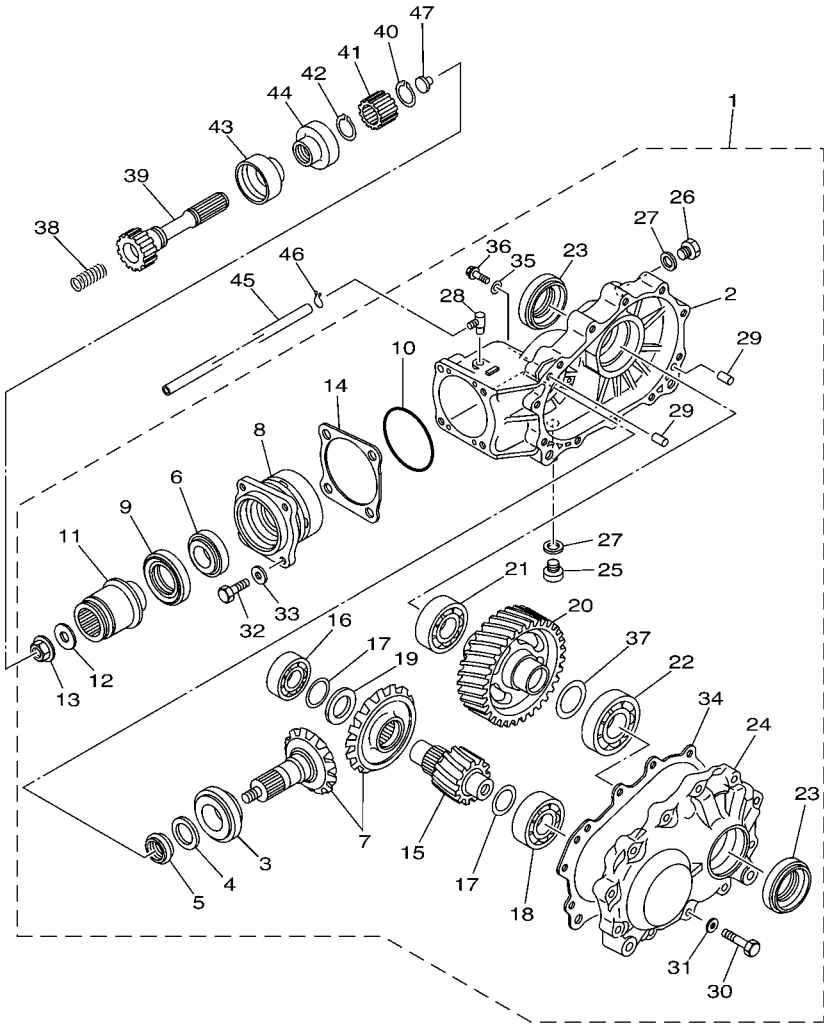

FIG. 26 DRIVE SHAFT

REF. NO.	PART NO.	DESCRIPTION	USA	CAN	EUR	OCE		REMARKS
37	3B4–46344–50	.SHIM (0.50T)	1	1	1	1		UR
38	90501–18002	SPRING, COMPRESSION	1	1	1	1		
39	3B4–46172–00	SHAFT, DRIVE	1	1	1	1		
40	99009–19400	CIRCLIP	1	1	1	1		
41	5KM–46126–00	COUPLING	1	1	1	1		
42	93410–22039	CIRCLIP	1	1	1	1		
43	5KM–46137–00	SEAL 2	1	1	1	1		
44	5KM–46136–00	SEAL 1	1	1	1	1		
45	90445–074F6	HOSE (L1300)	1	1	1	1		
46	90467–07029	CLIP	1	1	1	1		
47	5KM–46559–00	DAMPER	1	1	1	1		

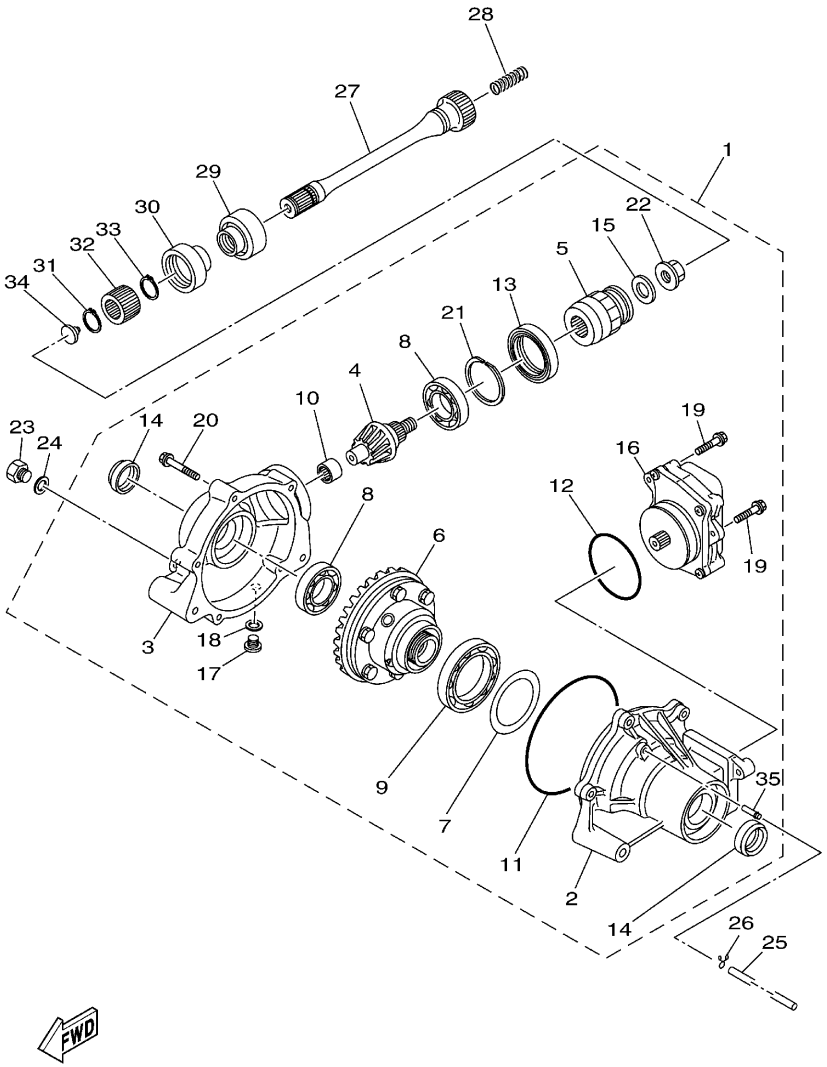

3B41100F2701

FIG. 27 FRONT DIFFERENTIAL

REF. NO.	PART NO.	DESCRIPTION	USA	CAN	EUR	OCE		REMARKS
1	3B4–46160–00	FRONT AXLE GEAR CASE COMP.	1	1	1	1		
2	3B4–46162–00	.HOUSING, BEARING 2	1	1	1	1		
3	3B4–46161–00	.HOUSING, SHAFT DRIVE 2	1	1	1	1		
4	3B4–46141–00	.PINION, DRIVE 2	1	1	1	1		
5	3B4–67839–00	.CUPLING	1	1	1	1		
6	3B4–46470–00	.LIMITED SLIP DIFF. ASSY	1	1	1	1		
7	3B4–46117–00	.SHIM, RING GEAR (0.1T)	1	1	1	1		UR
	3B4–46117–10	.SHIM, RING GEAR (0.2T)	1	1	1	1		UR
	3B4–46117–20	.SHIM, RING GEAR (0.3T)	1	1	1	1		UR
	3B4–46117–30	.SHIM, RING GEAR (0.4T)	1	1	1	1		UR
8	93306–00613	.BEARING	2	2	2	2		
9	3B4–46164–00	.BEARING 1	1	1	1	1		
10	3B4–46166–00	.BEARING 3	1	1	1	1		
11	3B4–46134–00	.O-RING 1	1	1	1	1		
12	3B4–46135–00	.O-RING 2	1	1	1	1		
13	93105–46001	.OIL SEAL	1	1	1	1		
14	3B4–46163–00	.SEAL,OIL 1	2	2	2	2		
15	3B4–47359–00	.WASHER	1	1	1	1		
16	3B4–4616A–00	.SERVO MOTOR COMP	1	1	1	1		
17	90340–10001	.PLUG, STRAIGHT SCREW	1	1	1	1		
18	90430–10003	.GASKET	1	1	1	1		
19	95812–06014	.BOLT, FLANGE	3	3	3	3		
20	95812–08040	.BOLT, FLANGE	5	5	5	5		
21	3B4–46142–00	.RING,HOLE SNAP 1	1	1	1	1		
22	4WV–46145–10	.NUT 1	1	1	1	1		
23	90340–14029	PLUG, STRAIGHT SCREW	1	1	1	1		
24	214–11198–01	GASKET	1	1	1	1		

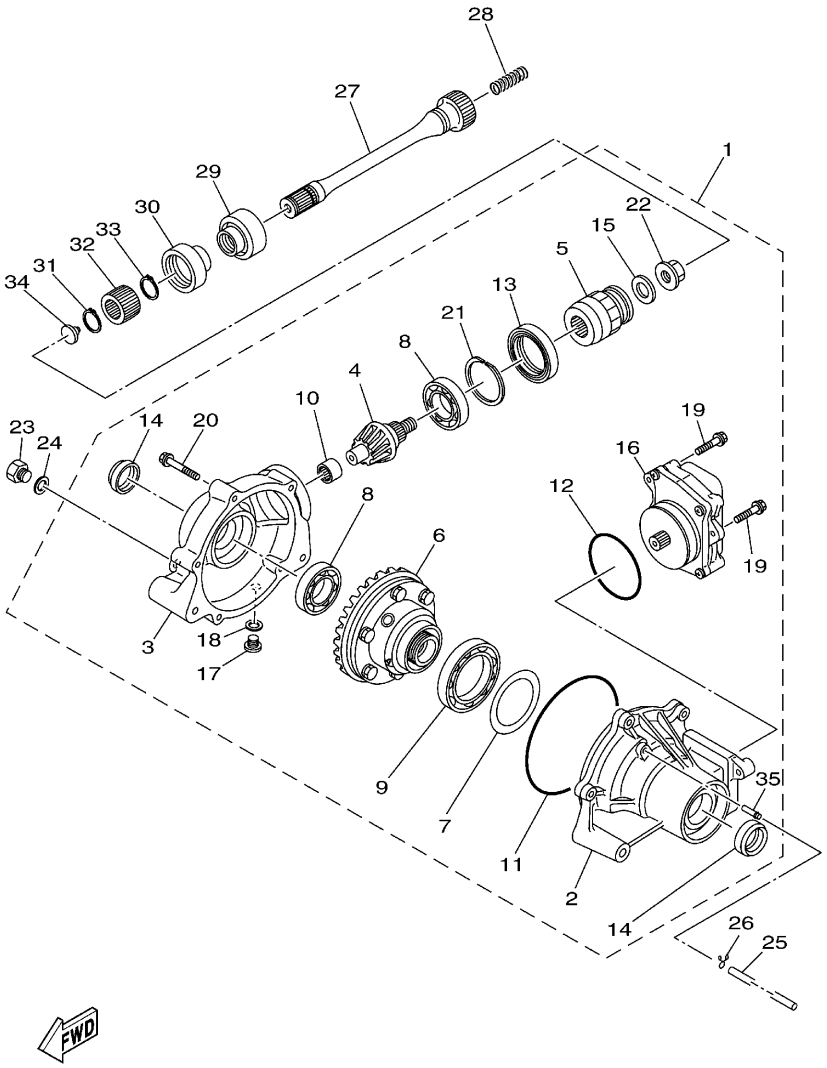

3B41100F2701

FIG. 27 FRONT DIFFERENTIAL

REF. NO.	PART NO.	DESCRIPTION	USA	CAN	EUR	OCE		REMARKS
25	90445–070F1	HOSE (L950)	1	1	1	1		
26	90467–07029	CLIP	1	1	1	1		
27	3B4–46173–00	SHAFT, DRIVE 2	1	1	1	1		
28	90501–18002	SPRING, COMPRESSION	1	1	1	1		
29	5KM–46137–00	SEAL 2	1	1	1	1		
30	5KM–46136–00	SEAL 1	1	1	1	1		
31	99009–19400	CIRCLIP	1	1	1	1		
32	5KM–46126–00	COUPLING	1	1	1	1		
33	93410–22039	CIRCLIP	1	1	1	1		
34	5KM–46559–00	DAMPER	1	1	1	1		
35	5GH–46293–00	.TUBE	1	1	1	1		

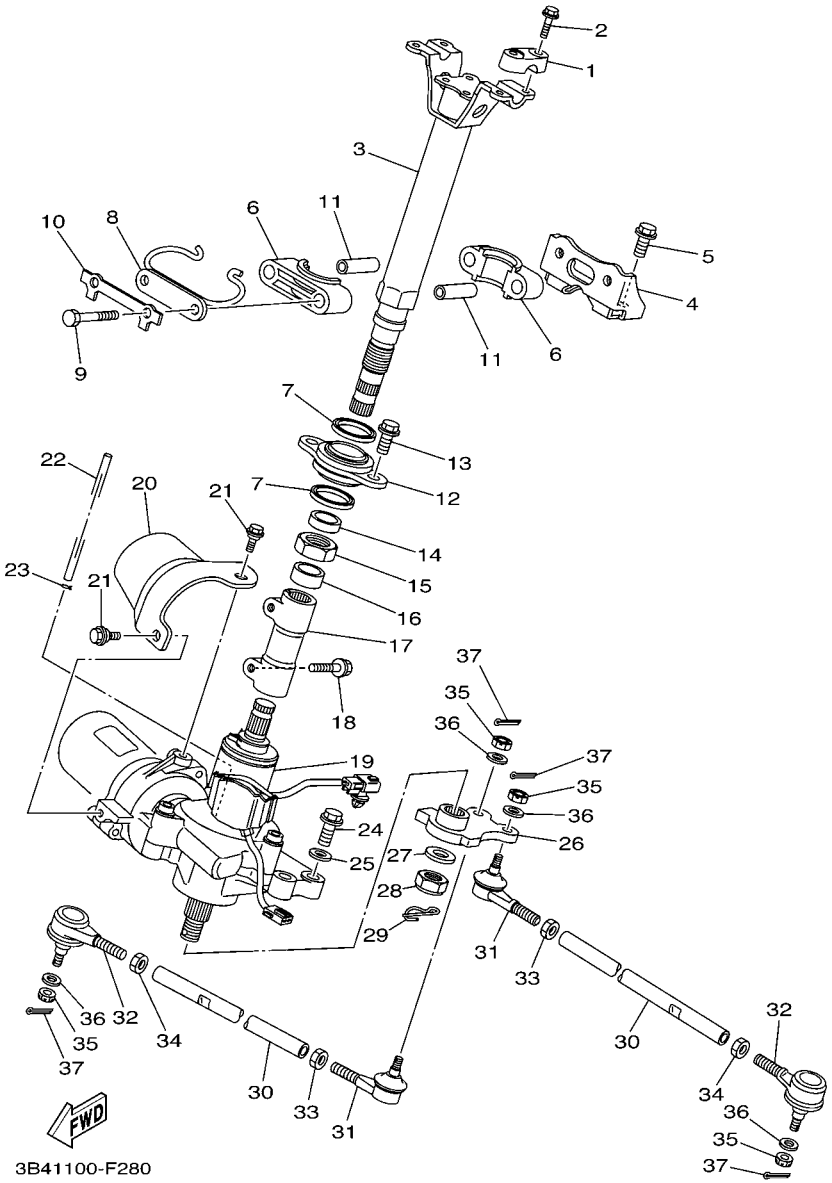

FIG. 28 STEERING

REF. NO.	PART NO.	DESCRIPTION	USA	CAN	EUR	OCE		REMARKS
1	8K1–23814–00	HOLDER, HANDLE	2	2	2	2		
2	95822–08030	BOLT, FLANGE	4	4	4	4		
3	3B4–23813–00	COLUMN, STEERING 2	1	1	1	1		
4	3B4–22517–00	SUPT., STRG. COLUMN	1	1	1	1		
5	90105–10204	BOLT, FLANGE	2	2	2	2		
6	1UY–23812–00	PLANE BEARING, STEERING	2	2	2	2		
7	93112–31011	OIL SEAL	2	2	2	2		
8	5GH–23868–00	BRACKET, STEERING LOWER	1	1	1	1		
9	97022–08060	BOLT	2	2	2	2		
10	1UY–23894–01	WASHER, LOCK 1	1	1	1	1		
11	90387–090R0	COLLAR	2	2	2	2		
12	3B4–23875–00	PLANE BEARING, STEERING LOWER	1	1	1	1		
13	90105–10204	BOLT, FLANGE	2	2	2	2		
14	90387–22014	COLLAR	1	1	1	1		
15	90185–22008	NUT, SELF-LOCKING	1	1	1	1		
16	90387–22591	COLLAR	1	1	1	1		
17	3B4–2381B–00	JOINT	1	1	1	1		
18	90119–08106	BOLT, WITH WASHER	2	2	2	2		
19	3B4–238B0–10	POWER STRG. ACTUATOR ASSY	1	1	1	1		
20	3B4–238B6–00	COVER, MOTOR	1	1	1	1		
21	90109–06172	BOLT	2	2	2	2		
22	90445–070F1	HOSE (L950)	1	1	1	1		
23	90467–07029	CLIP	1	1	1	1		
24	90105–08153	BOLT, FLANGE	4	4	4	4		
25	90201–08048	WASHER, PLATE	4	4	4	4		
26	3B4–23816–00	ARM, PITMAN	1	1	1	1		
27	90201–16021	WASHER, PLATE	1	1	1	1		

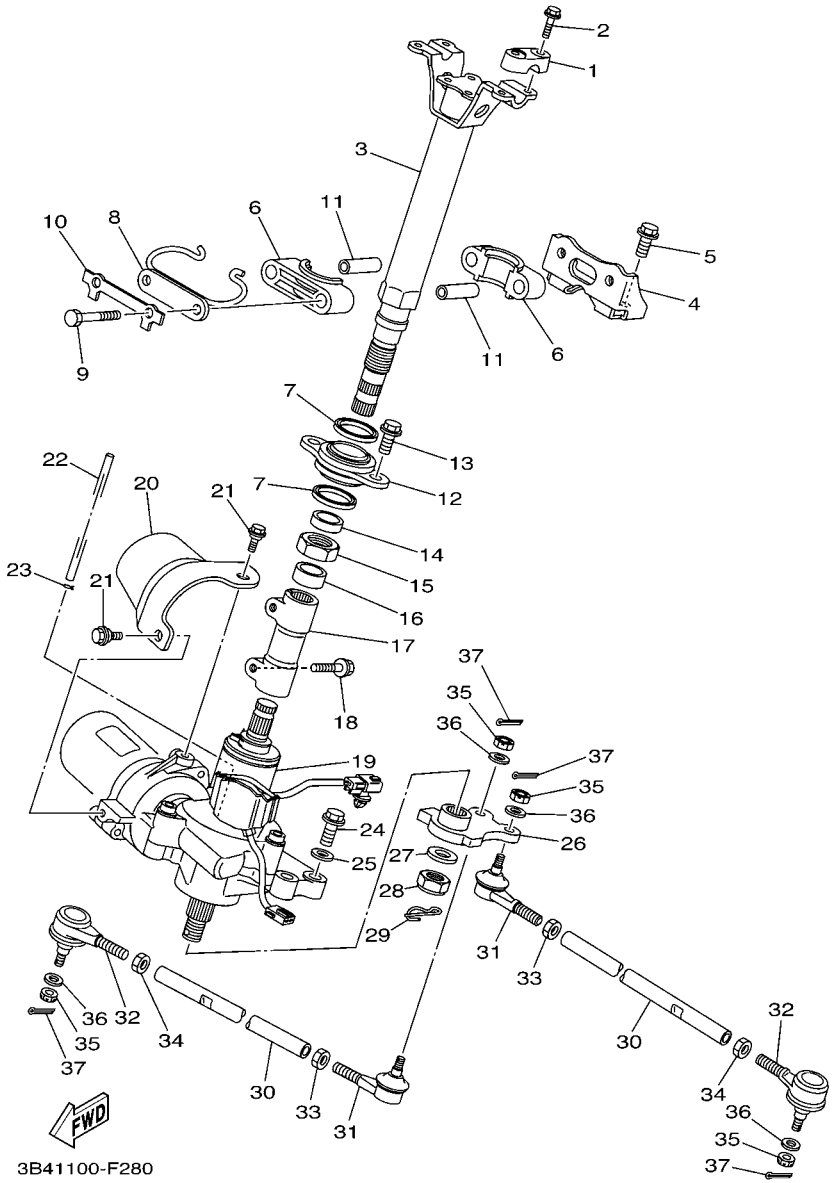

FIG. 28 STEERING

REF. NO.	PART NO.	DESCRIPTION	USA	CAN	EUR	OCE		REMARKS
28	95612–16100	NUT, U	1	1	1	1		
29	90468–18195	CLIP	1	1	1	1		
30	5KM–23831–00	ROD, TIE	2	2	2	2		
31	1UY–23841–01	JOINT, UNIVERSAL 1	2	2	2	2		
32	1UY–23845–01	JOINT, UNIVERSAL 2	2	2	2	2		
33	95302–10700	NUT	2	2	2	2		
34	90170–10010	NUT	2	2	2	2		(L.H. THREAD)
35	90171–10001	NUT, CASTLE	4	4	4	4		
36	90209–10229	WASHER	4	4	4	4		
37	91401–20020	PIN, COTTER	4	4	4	4		

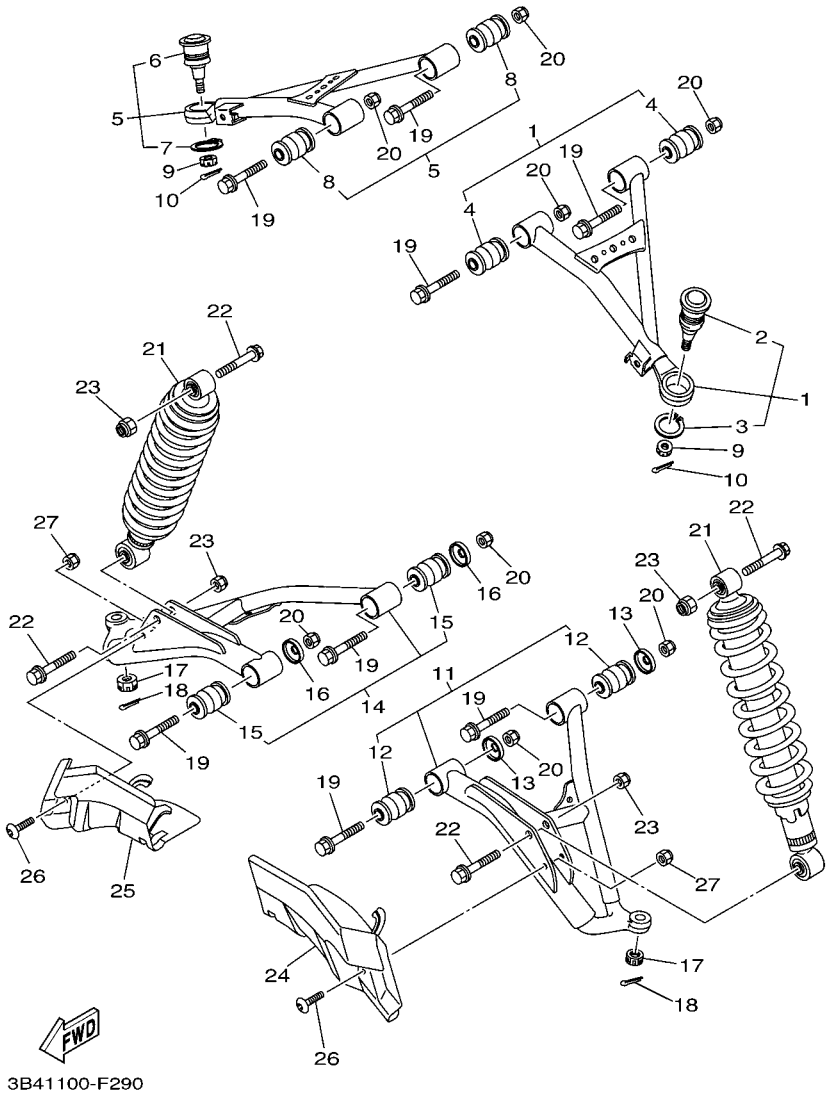

FIG. 29 FRONT SUSPENSION & WHEEL

REF. NO.	PART NO.	DESCRIPTION	USA	CAN	EUR	OCE		REMARKS
1	3B4–23540–00	FRONT UPPER ARM COMP. (LEFT)	1	1				
	3B4–23540–11	FRONT UPPER ARM COMP. (LEFT)			1	1		Go to P/N : PE0-MC-140013
2	5LP–23579–00	.BALL JOINT 2	1	1	1	1		
3	99009–30400	.CIRCLIP	1	1	1	1		
4	5KM–23526–10	.BUSH	2	2	2	2		
5	3B4–23550–00	FRONT UPPER ARM COMP. (RIGHT)	1	1				
	3B4–23550–11	FRONT UPPER ARM COMP. (RIGHT)			1	1		Go to P/N : PE0-MC-140013
6	5LP–23579–00	.BALL JOINT 2	1	1	1	1		
7	99009–30400	.CIRCLIP	1	1	1	1		
8	5KM–23526–10	.BUSH	2	2	2	2		
9	90171–10001	NUT, CASTLE	2	2	2	2		
10	91401–20020	PIN, COTTER	2	2	2	2		
11	3B4–23570–00	FRONT LOWER ARM COMP. (LEFT)	1	1				
	3B4–23570–11	FRONT LOWER ARM COMP. (LEFT)			1	1		
12	5KM–23526–10	.BUSH	2	2	2	2		
13	5KM–22149–10	WASHER	2	2	2	2		
14	3B4–23580–00	FRONT LOWER ARM COMP. (RIGHT)	1	1				
	3B4–23580–11	FRONT LOWER ARM COMP. (RIGHT)			1	1		
15	5KM–23526–10	.BUSH	2	2	2	2		
16	5KM–22149–10	WASHER	2	2	2	2		
17	90171–12001	NUT, CASTLE	2	2	2	2		
18	91490–25020	PIN, COTTER	2	2	2	2		
19	90105–10222	BOLT, FLANGE	8	8	8	8		
20	90185–10012	NUT, SELF-LOCKING	8	8	8	8		
21	3B4–23350–01	SHOCK ABSORBER ASSY	2	2	2	2		
22	90105–10131	BOLT, FLANGE	4	4	4	4		
23	90185–10012	NUT, SELF-LOCKING	4	4	4	4		

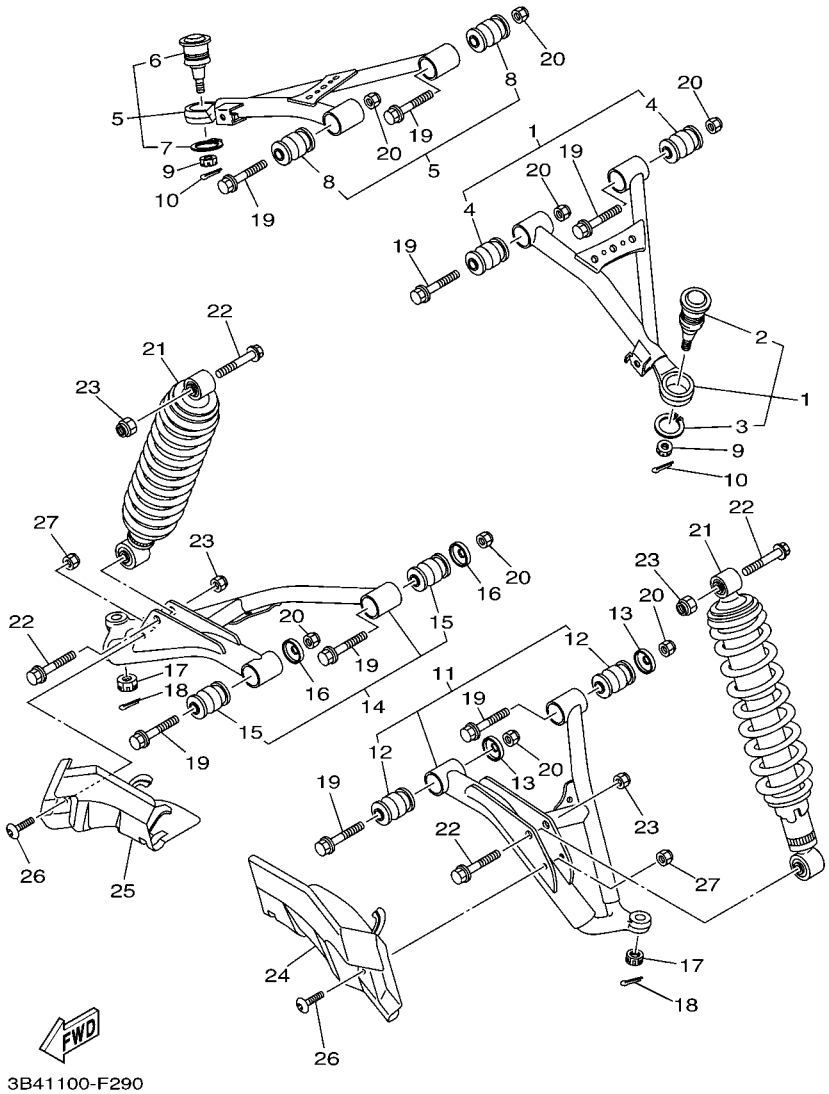

FIG. 29 FRONT SUSPENSION & WHEEL

REF. NO.	PART NO.	DESCRIPTION	USA	CAN	EUR	OCE		REMARKS
24	3B4–23123–00	COVER, LOWER 1	1	1	1	1		
25	3B4–23133–00	COVER, LOWER 2	1	1	1	1		
26	90110–06200	BOLT, HEXAGON SOCKET HEAD	2	2	2	2		
27	95702–06300	NUT, NYLON	2	2	2	2		

PARTS NEWS

YAMAHA
YAMAHA MOTOR CO., LTD.
2500 SHINGAI IWATA SHIZUOKA JAPAN

Date: Apr., 7,2014

News No. PE0-MC-140013 (1/3)

Signature: S.Ishibashi

Cause ☐ Revision Notice ☐ Correction ☑ Sales Unit Change ☐ Others

Model	See the"List of Models and CATALOGUE No's below."
Subject	Handling of Front upper arm comp. for 3B4 type
CATALOGUE NO.	See the"List of Models and CATALOGUE No's below."

Time of YPEC Revision Text, Illustration --> Apr./22/2014 PDF Replace --> Apr./22/2014
(YPEC = Yamaha Parts Electrical Catalogue = Website parts catalogue)

1.CONTENTS

As for 3B4-23540-00/01 & 3B4-23550-00/01, parts supply is discontinued.
1HP-H3540-00 & 1HP-H3550-00 can be used as a substitute part instead of 3B4-23540-00/01 & 3B4-23550-00/0
However, a ball joint and circlip is not included in the 1HP-H3540-00 & 1HP-H3550-00 of substitute part.
When you exchange old front / rear upper arm comp., please exchange with New "front / rear upper arm comp, ball joint and circlip".

FIG.29 FRONT SUSPENSION & WHEEL SECTION

2. PART No. MODIFICATION

OLD P/No.	NEW P/No.	PART NAME	Q'TY	REMARKS	*1
3B4-23540-00/01	1HP-F3540-00	FRONT UPPER ARM COMP. (L.H	1		○
-----	5LP-23579-00	BALL JOINT 2	1		○
-----	99009-30400	CIRCLIP	1		○
OLD P/No.	NEW P/No.	PART NAME	Q'TY	REMARKS	*1
3B4-23550-00/01	1HP-F3550-00	FRONT UPPER ARM COMP. (R.H	1		○
-----	5LP-23579-00	BALL JOINT 2	1		○
-----	99009-30400	CIRCLIP	1		○

*1: Interchangeability

A	Old Parts → Old Parts New Parts → New Parts	
B	Old Parts → Old Parts New Parts → New Parts	
C	Old Parts → Old Parts New Parts → New Parts	
○	These parts are interchangeable with a set	

3. ILLUSTRATION

3B4 type

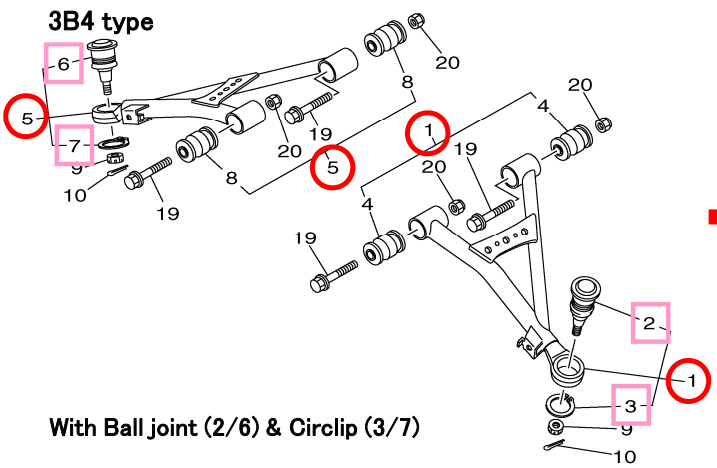

With Ball joint (2/6) & Circlip (3/7)

1HP type

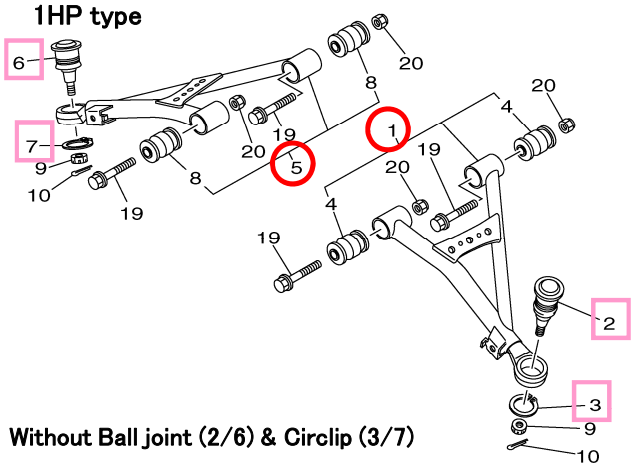

Without Ball joint (2/6) & Circlip (3/7)

Thank you very much for your cooperation.

Parts Manager Check	Service Manager Check	Parts Manager File	YAMAHA MOTOR CO.,LTD 2500 Shingai Iwata Shizuoka 438-8501.Japan Technical Publication Dept.

YAMAHA GENUINE Parts & Accessories

PARTS NEWS

YAMAHA
YAMAHA MOTOR CO., LTD.
2500 SHINGAI IWATA SHIZUOKA JAPAN

Date: Apr., 7,2014

News No. PE0-MC-140013 (2/3)

Signature: S.Ishibashi

Cause ☐ Revision Notice ☐ Correction ☑ Sales Unit Change ☐ Others

Model	See the"List of Models and CATALOGUE No's below."
Subject	Handling of Front upper arm comp. for 3B4 type
CATALOGUE NO.	See the"List of Models and CATALOGUE No's below."

Time of YPEC Revision Text, Illustration --> Apr./22/2014 PDF Replace --> Apr./22/2014

(YPEC = Yamaha Parts Electrical Catalogue = Website parts catalogue)

4. LIST of Models and CATALOG No's

The applicable MODELS, MODEL CODES, and CATALOGUE No's are as follows.

MODEL YEAR	MODEL NAME	MODEL CODE	CATALOGUE No.
2007	YFM7FGPW	3B41 / 3B42	1F3B4-100E1
2007	YFM7FGPW	3B43 / 3B44	1F3B4-300E1
2007	YFM7FGPW	3B45 / 3B46 / 3B47	1F3B4-100EA
2007	YFM7FGPW	3B48	1F3B4-110E1
2007	YFM7FGPW	3B4A / 3B4B / 3B4C / 3B4D	1F3B4-100EK
2008	YFM7FGPX	3B49 / 3B4E / 3B4F / 3B4G	1G3B4-100E1
2008	YFM7FGPX	3B4H / 3B4J / 3B4K	1G3B4-100EA
2008	YFM7FGPX	3B4L	1G3B4-110E1
2008	YFM7FGPX	3B4M / 3B4N / 3B4P / 3B4R	1G3B4-100EK
2008	YFM7FGPX	3B4S	1G3B4-171E1
2008	YFM7FGPX	3B4T	1G3B4-171EA
2008	YFM7FGX	5C01 / 5C02 / 5C04	1G5C0-100E1
2008	YFM7FGX	5C05 / 5C06	1G5C0-100EA
2009	YFM7FGPY	43P1	1H43P-110E1
2009	YFM7FGPY	43P1 / 43P2 / 43P3 / 43P4	1H43P-100E1
2009	YFM7FGPY	43P5	1H43P-110EA
2009	YFM7FGPY	43P6 / 43P7	1H43P-100EA
2009	YFM7FGPY	43P8	1H43P-110EK
2009	YFM7FGPY	43P9	1H43P-171E1
2009	YFM7FGPY	43PA	1H43P-110EY
2009	YFM7FGPY	43PB / 43PC / 43PD	1H43P-100EK
2009	YFM7FGPY	43PE / 43PF	1H43P-100EY
2009	YFM7FGY	5C0A	1H5C0-110E1
2009	YFM7FGY	5C0B	1H5C0-171E1
2009	YFM7FGY	5C0C	1H5C0-110EA
2009	YFM7FGY	5C0D	1H5C0-171EA
2009	YFM5FGY	28P1	1H28P-110E1
2009	YFM5FGY	28P1 / 28P2 / 28P3 / 28P4	1H28P-100E1
2009	YFM5FGY	28P5	1H28P-110EA
2009	YFM5FGY	28P6	1H28P-171E1
2009	YFM5FGPY	34D1	1H34D-110E1
2009	YFM5FGPY	34D2 / 34D3 / 34D4	1H34D-100E1
2009	YFM5FGPY	34D5	1H34D-110EA
2009	YFM5FGPY	34D6 / 34D7	1H34D-100EA
2009	YFM5FGPSEY	34D8	1H34D-110EK
2009	YFM5FGPSEY	34D9 / 34DA / 34DB	1H34D-100EK
2010	YFM7FGPZ	43PG	1J43P-110E1
2010	YFM7FGPZ	43PG / 43PH / 43PJ / 43PK	1J43P-100E1

Thank you very much for your cooperation.

Parts Manager Check	Service Manager Check	Parts Manager File	YAMAHA MOTOR CO.,LTD 2500 Shingai Iwata Shizuoka 438-8501.Japan Technical Publication Dept.

YAMAHA GENUINE Parts & Accessories

PARTS NEWS

YAMAHA MOTOR CO., LTD.
2500 SHINGAI IWATA SHIZUOKA JAPAN

Date: Apr., 7,2014

News No. PE0-MC-140013 (3/3)

Signature: S.Ishibashi

Cause ☐ Revision Notice ☐ Correction ☑ Sales Unit Change ☐ Others

Model	See the"List of Models and CATALOGUE No's below."
Subject	Handling of Front upper arm comp. for 3B4 type
CATALOGUE NO.	See the"List of Models and CATALOGUE No's below."

Time of YPEC Revision Text, Illustration --> Apr./22/2014 PDF Replace --> Apr./22/2014

(YPEC = Yamaha Parts Electrical Catalogue = Website parts catalogue)

4. LIST of Models and CATALOG No's

The applicable MODELS, MODEL CODES, and CATALOGUE No's are as follows.

MODEL YEAR	MODEL NAME	MODEL CODE	CATALOGUE No.
2010	YFM7FGPHZ	43PL	1J43P-110EA
2010	YFM7FGPHZ	43PM / 43PN	1J43P-100EA
2010	YFM7FGPSEZ	43PS	1J43P-110EK
2010	YFM7FGPSEZ	43PT / 43PU / 43PV	1J43P-100EK
2010	YFM7FGPSLZ	43PY	1J43P-171E1
2010	YFM7FGZ	5C0E	1J5C0-110E1
2010	YFM7FGZ	5C0F	1J5C0-171E1
2010	YFM7FGHZ	5C0G	1J5C0-110EA
2010	YFM7FGHZ	5C0H	1J5C0-171EA
2010	YFM5FGZ	28P7	1J28P-110E1
2010	YFM5FGZ / YFM550FAZ	28P7 / 28P8 / 28P9 / 28PA	1J28P-100E1
2010	YFM5FGHZ	28PB	1J28P-110EA
2010	YFM5FGPZ	34DC	1J34D-110E1
2010	YFM5FGPZ / YFM550FAPZ	34DD / 34DE / 34DF	1J34D-100E1
2010	YFM5FGPHZ	34DG	1J34D-110EA
2010	YFM5FGPHZ	34DH / 34DJ	1J34D-100EA
2011	YFM7FGPA	1DT1	1K1DT-110E1
2011	YFM7FGPA / YFM700FAPA	1DT1 / 2 / 3 / 4	1K1DT-100E1
2011	YFM7FGPHA	1DT5	1K1DT-110EA
2011	YFM7FGPHA	1DT6 / 7	1K1DT-100EA
2011	YFM7FGPA	1DT8	1K1DT-110EK
2011	YFM7FGPSEA	1DT9 / A	1K1DT-100EK
2011	YFM7FGPSPA	1DTB	1K1DT-110EV
2011	YFM7FGPSPA	1DTC / D / E	1K1DT-100EV
2011	YFM7FGA	5C0J	1K5C0-110E1
2011	YFM7FGHA	5C0L	1K5C0-110EA
2011	YFM7FGA	5C0M	1K5C0-110EK
2011	YFM7FGSEA	5C0N	1K5C0-171E1
2011	YFM5FGPA	34DK	1K34D-110E1
2011	YFM5FGPA / YFM550FAPA	34DL / M / N	1K34D-100E1
2011	YFM5FGPHA	34DP	1K34D-110EA
2011	YFM5FGPHA	34DR / S	1K34D-100EA
2011	YFM5FGPA	34DT	1K34D-110EK
2011	YFM5FGPSEA	34DU / V	1K34D-100EK
2011	YFM5FGA	28PC	1K28P-110E1
2011	YFM5FGA	28PC / D / E	1K28P-100E1
2011	YFM5FGHA	28PF	1K28P-110EA

Thank you very much for your cooperation.

Parts Manager Check	Service Manager Check	Parts Manager File	YAMAHA MOTOR CO.,LTD 2500 Shingai Iwata Shizuoka 438-8501.Japan Technical Publication Dept.

YAMAHA GENUINE Parts & Accessories

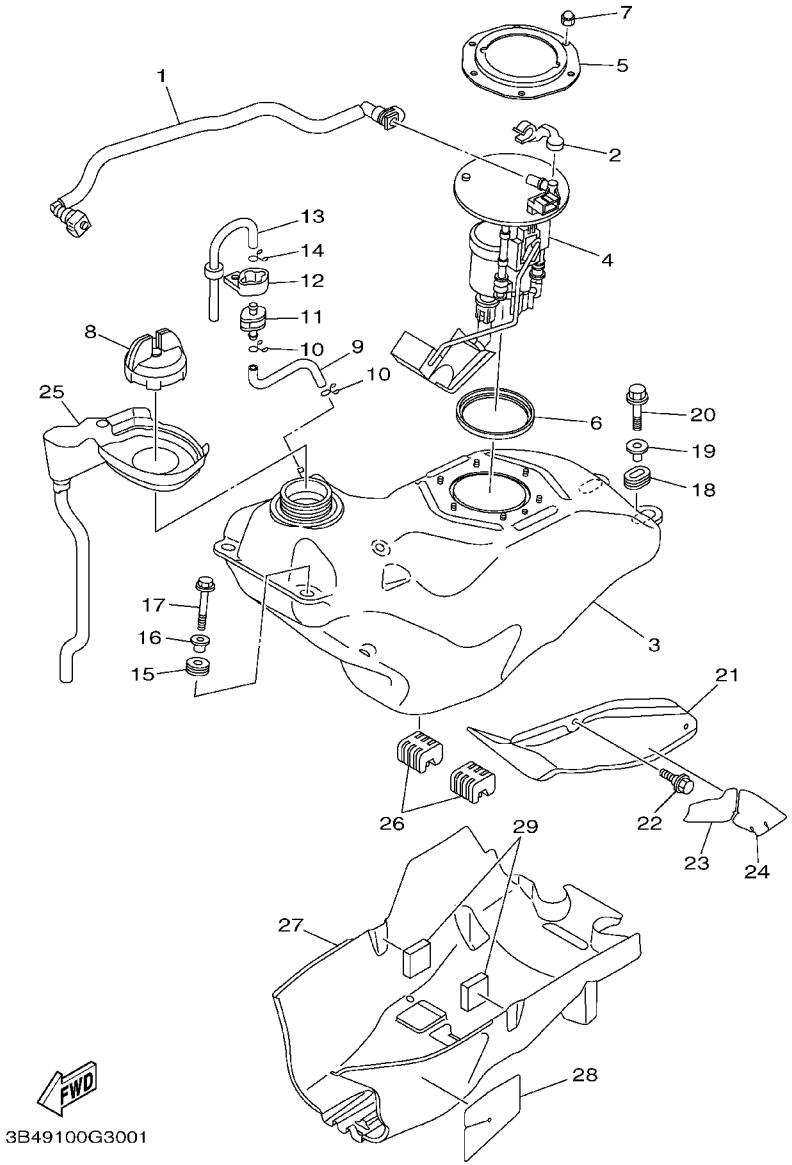

FIG. 30 FUEL TANK

REF. NO.	PART NO.	DESCRIPTION	USA	CAN	EUR	OCE		REMARKS
1	3B4–13971–10	PIPE, FUEL 1	1	1				
	3B4–13971–00	PIPE, FUEL 1			1	1		
2	90464–14004	CLAMP	1	1	1	1		
3	3B4–24110–10	FUEL TANK COMP.	1	1				
	3B4–24110–00	FUEL TANK COMP.			1	1		
4	3B4–13907–00	FUEL PUMP COMP.	1	1	1	1		
5	3B4–24491–00	BRACKET, FUEL PUMP	1	1	1	1		
6	1S3–24486–00	O-RING	1	1	1	1		
7	95302–06800	NUT, CROWN	6	6	6	6		
8	3B4–24610–00	CAP ASSY	1	1	1	1		
9	3B4–24312–00	PIPE 2	1	1	1	1		
10	90467–09006	CLIP	2	2	2	2		
11	3B4–24380–10	PIPE JOINT ASSY	1	1	1	1		
12	3B4–24398–00	BAND 1	1	1	1	1		
13	3B4–24313–00	PIPE 3	1	1	1	1		
14	90467–09006	CLIP	1	1	1	1		
15	90480–18290	GROMMET	2	2	2	2		
16	90387–066J1	COLLAR	2	2	2	2		
17	95802–06030	BOLT, FLANGE	2	2	2	2		
18	90480–01400	GROMMET	2	2	2	2		
19	90387–07021	COLLAR	2	2	2	2		
20	95802–06030	BOLT, FLANGE	2	2	2	2		
21	3B4–24129–00	COVER, SIDE 1	1	1	1	1		
22	90109–06172	BOLT	2	2	2	2		
23	3B4–2414J–00	DAMPER, PLATE 2	1	1	1	1		
24	3B4–2414K–00	DAMPER, PLATE 3	1	1	1	1		
25	3B4–2414F–00	COVER, FILLER COMP.	1	1	1	1		

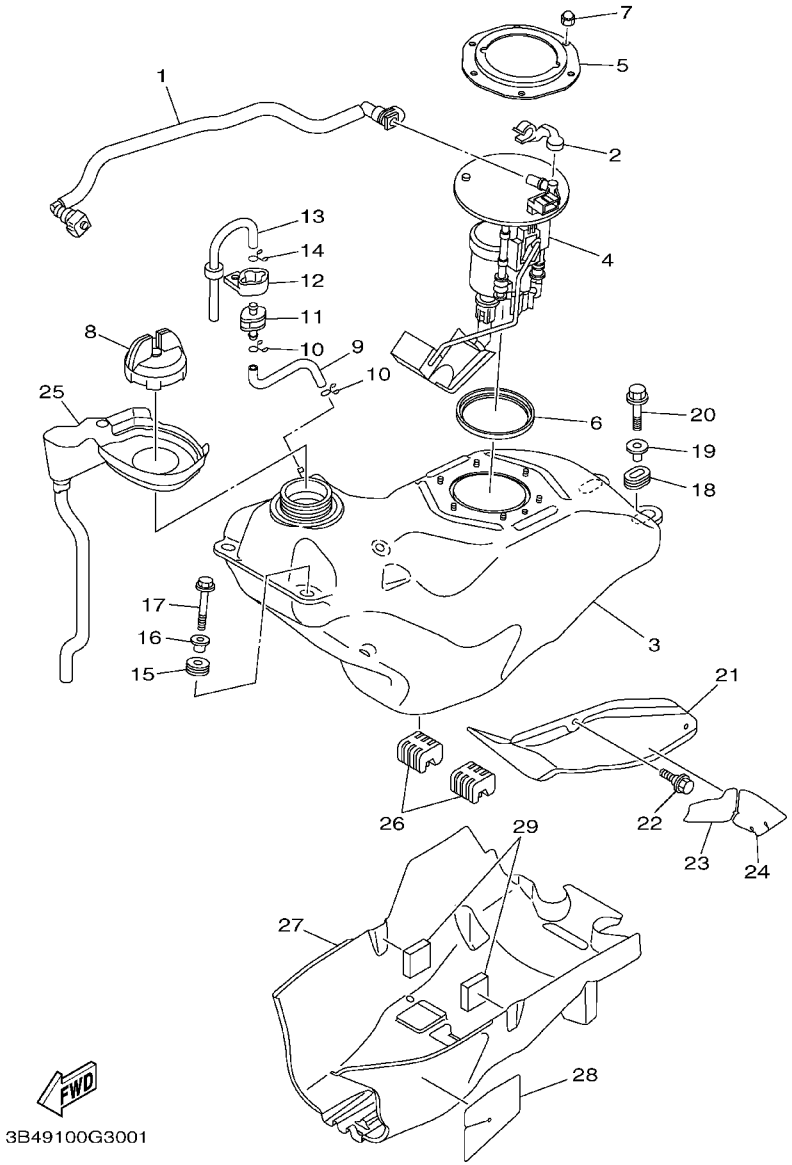

FIG. 30 FUEL TANK

REF. NO.	PART NO.	DESCRIPTION	USA	CAN	EUR	OCE		REMARKS
26	3B4–24181–00	DAMPER, LOCATING 1	2	2	2	2		
27	3B4–24141–00	PROTECTOR, FUEL TANK	1	1	1	1		
28	3B4–2416G–00	INSULATOR, FUEL TANK 2	1	1	1	1		
29	3B4–24182–00	DAMPER, LOCATING 2	2	2				

FIG. 31 SEAT

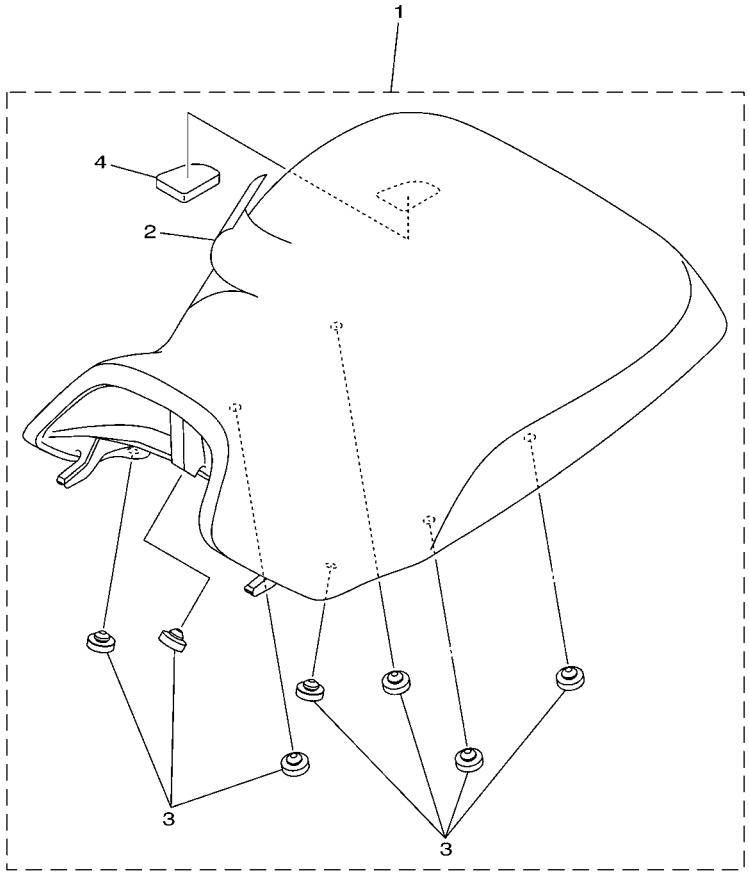

3B41100-F310

REF. NO.	PART NO.	DESCRIPTION	USA	CAN	EUR	OCE		REMARKS
1	3B4–24710–01	SINGLE SEAT ASSY	1	1		1		
	3B4–24710–31	SINGLE SEAT ASSY			1			
2	3B4–2470F–00	.SEAT COVER COMP.	1	1		1		
	3B4–2470F–30	.SEAT COVER COMP.			1			
3	22W–24741–00	.PAD, SEAT	7	7	7	7		
4	3B4–24725–00	.SPACER 1	1	1	1	1		

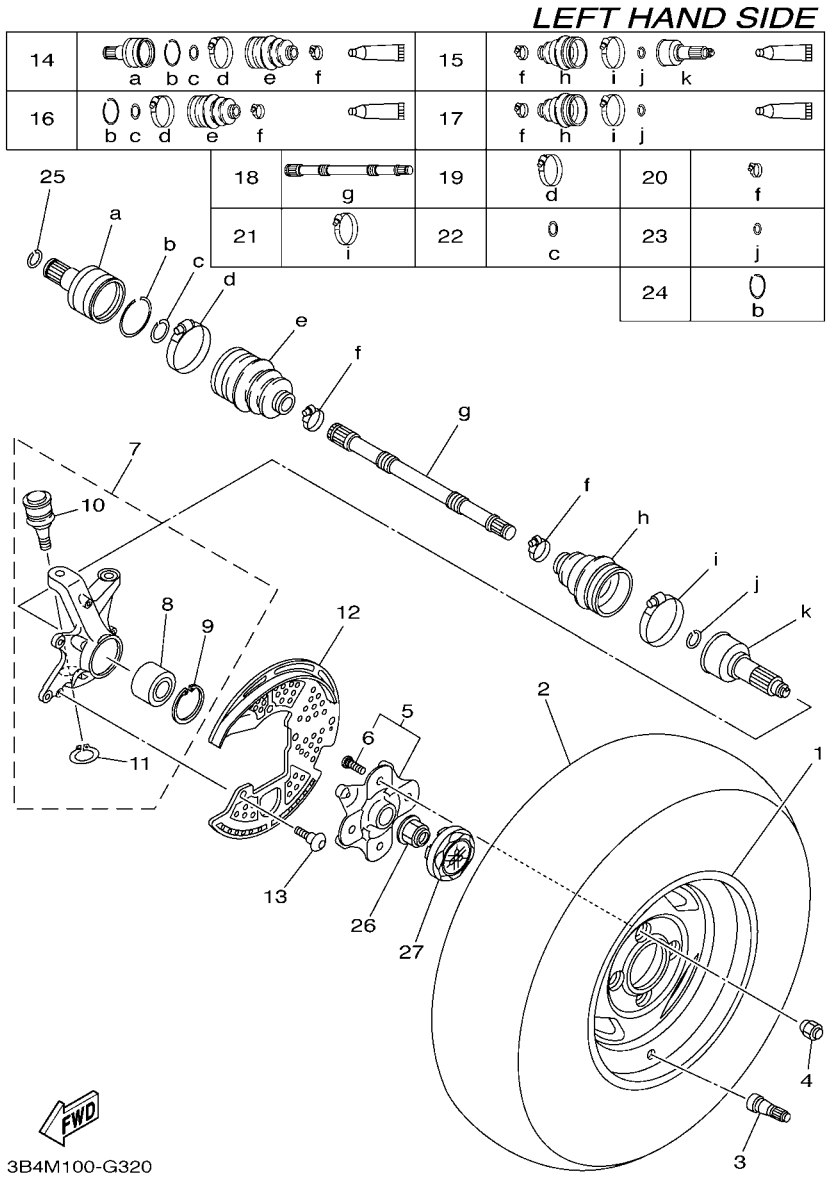

FIG. 32 FRONT WHEEL

REF. NO.	PART NO.	DESCRIPTION	USA	CAN	EUR	OCE		REMARKS
1	3B4–25180–B0	WHEEL COMP.	1	1	1	1		
2	94108–12012	TIRE (AT25X8-12** KT421 T/L N)	1	1	1			DUNLOP
	94108–12008	TIRE(AT25X8-12,C828 4P/TL)				1		CHENG SHIN
3	93900–00030	VALVE, RIM (TR412)	1	1	1	1		TAIHEIYO
4	90179–10016	NUT	4	4	4	4		
5	3B4–25111–10	HUB, FRONT	1	1	1	1		
6	90114–10014	.BOLT, SERRATION	4	4	4	4		
7	3B4–23501–00	STEERING KNUCKLE ASSY (LEFT)	1	1	1	1		
8	93305–00602	.BEARING	1	1	1	1		
9	99009–55500	.CIRCLIP	1	1	1	1		
10	3B4–23579–00	.BALL JOINT 2	1	1	1	1		
11	99009–30400	.CIRCLIP	1	1	1	1		
12	3B4–2514A–00	RING, WHEEL 1	1	1	1	1		
13	90154–06014	SCREW, BINDING	3	3	3	3		
14	3B4–2510J–00	DOUBLE OFF SET JOINT	1	1	1	1		
15	3B4–2510F–00	BALL JOINT SET	1	1	1	1		
16	3B4–2510H–00	BOOT SET(DOUBLE OFFSET JOINT)	1	1	1	1		
17	3B4–2510G–00	BOOT SET (BALL JOINT)	1	1	1	1		
18	3B4–2518E–00	SHAFT	1	1	1	1		
19	3B4–2511H–00	BOOT BAND(DOUBLE OFFSET JOINT)	1	1	1	1		
20	3B4–2512G–00	BOOT BAND (SMALL)	2	2	2	2		
21	3B4–2511G–00	BOOT BAND (BALL JOINT)	1	1	1	1		
22	3B4–2512J–00	SNAP RING	1	1	1	1		
23	3B4–2512H–00	CIRCLIP	1	1	1	1		
24	3B4–25182–00	CIRCLIP	1	1	1	1		
25	93450–22119	CIRCLIP	1	1	1	1		
26	90179–20016	NUT	1	1	1	1		

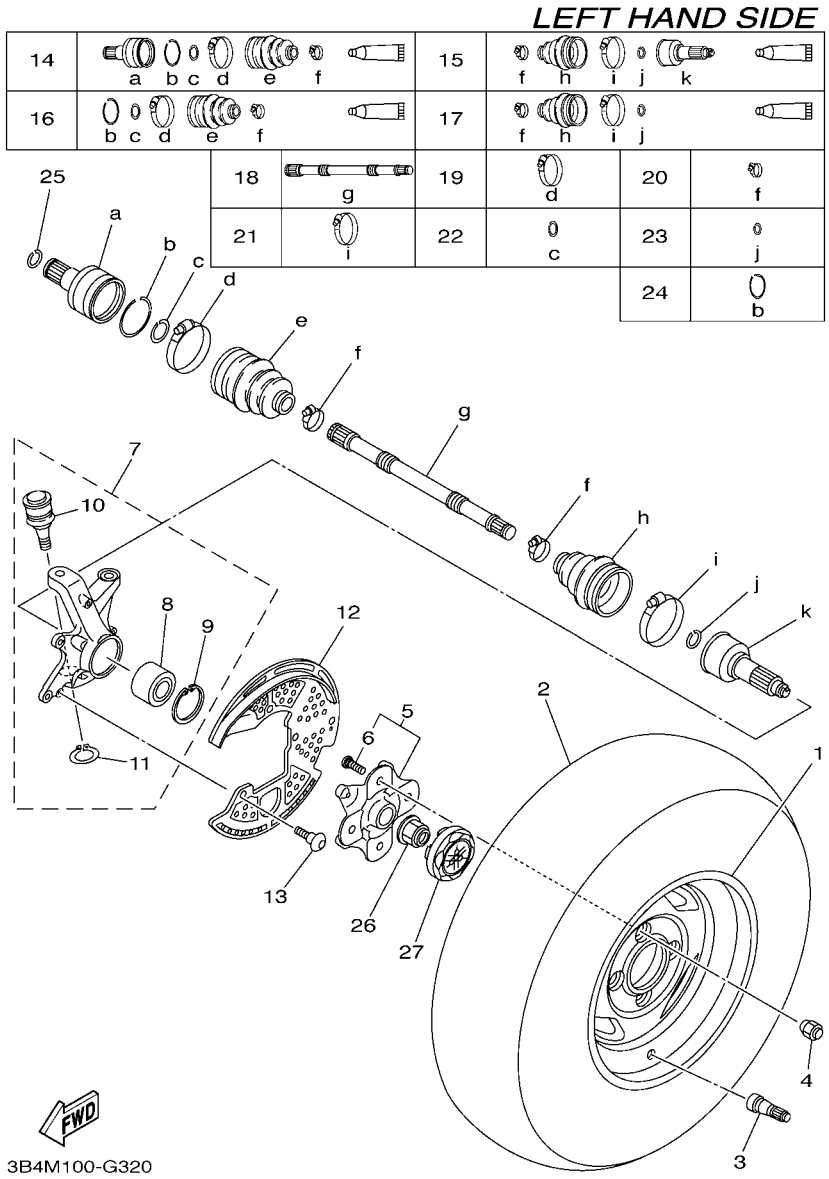

FIG. 32 FRONT WHEEL

REF. NO.	PART NO.	DESCRIPTION	USA	CAN	EUR	OCE		REMARKS
27	3B4–2530B–00	WHEEL CAP ASSY.	1	1	1	1		

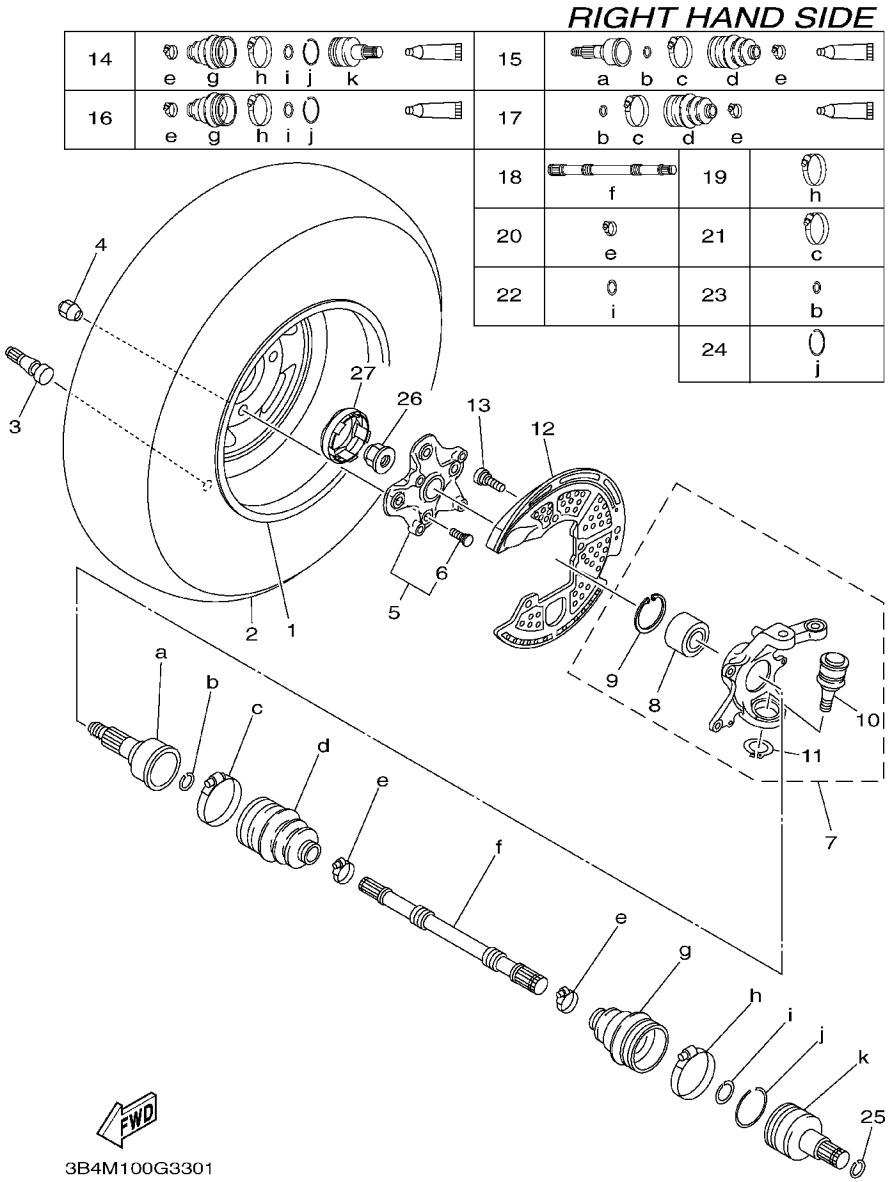

FIG. 33 FRONT WHEEL 2

REF. NO.	PART NO.	DESCRIPTION	USA	CAN	EUR	OCE		REMARKS
1	3B4–25180–B0	WHEEL COMP.	1	1	1	1		
2	94108–12012	TIRE (AT25X8-12** KT421 T/L N)	1	1	1			DUNLOP
	94108–12008	TIRE(AT25X8-12,C828 4P/TL)				1		CHENG SHIN
3	93900–00030	VALVE, RIM (TR412)	1	1	1	1		TAIHEIYO
4	90179–10016	NUT	4	4	4	4		
5	3B4–25111–10	HUB, FRONT	1	1	1	1		
6	90114–10014	.BOLT, SERRATION	4	4	4	4		
7	3B4–23502–00	STEERING KNUCKLE ASSY (RIGHT)	1	1	1	1		
8	93305–00602	.BEARING	1	1	1	1		
9	99009–55500	.CIRCLIP	1	1	1	1		
10	3B4–23579–00	.BALL JOINT 2	1	1	1	1		
11	99009–30400	.CIRCLIP	1	1	1	1		
12	3B4–2515A–00	RING, WHEEL 2	1	1	1	1		
13	90154–06014	SCREW, BINDING	3	3	3	3		
14	3B4–2510J–00	DOUBLE OFF SET JOINT	1	1	1	1		
15	3B4–2510F–00	BALL JOINT SET	1	1	1	1		
16	3B4–2510H–00	BOOT SET(DOUBLE OFFSET JOINT)	1	1	1	1		
17	3B4–2510G–00	BOOT SET (BALL JOINT)	1	1	1	1		
18	3B4–2518E–00	SHAFT	1	1	1	1		
19	3B4–2511H–00	BOOT BAND(DOUBLE OFFSET JOINT)	1	1	1	1		
20	3B4–2512G–00	BOOT BAND (SMALL)	2	2	2	2		
21	3B4–2511G–00	BOOT BAND (BALL JOINT)	1	1	1	1		
22	3B4–2512J–00	SNAP RING	1	1	1	1		
23	3B4–2512H–00	CIRCLIP	1	1	1	1		
24	3B4–25182–00	CIRCLIP	1	1	1	1		
25	93450–22119	CIRCLIP	1	1	1	1		
26	90179–20016	NUT	1	1	1	1		

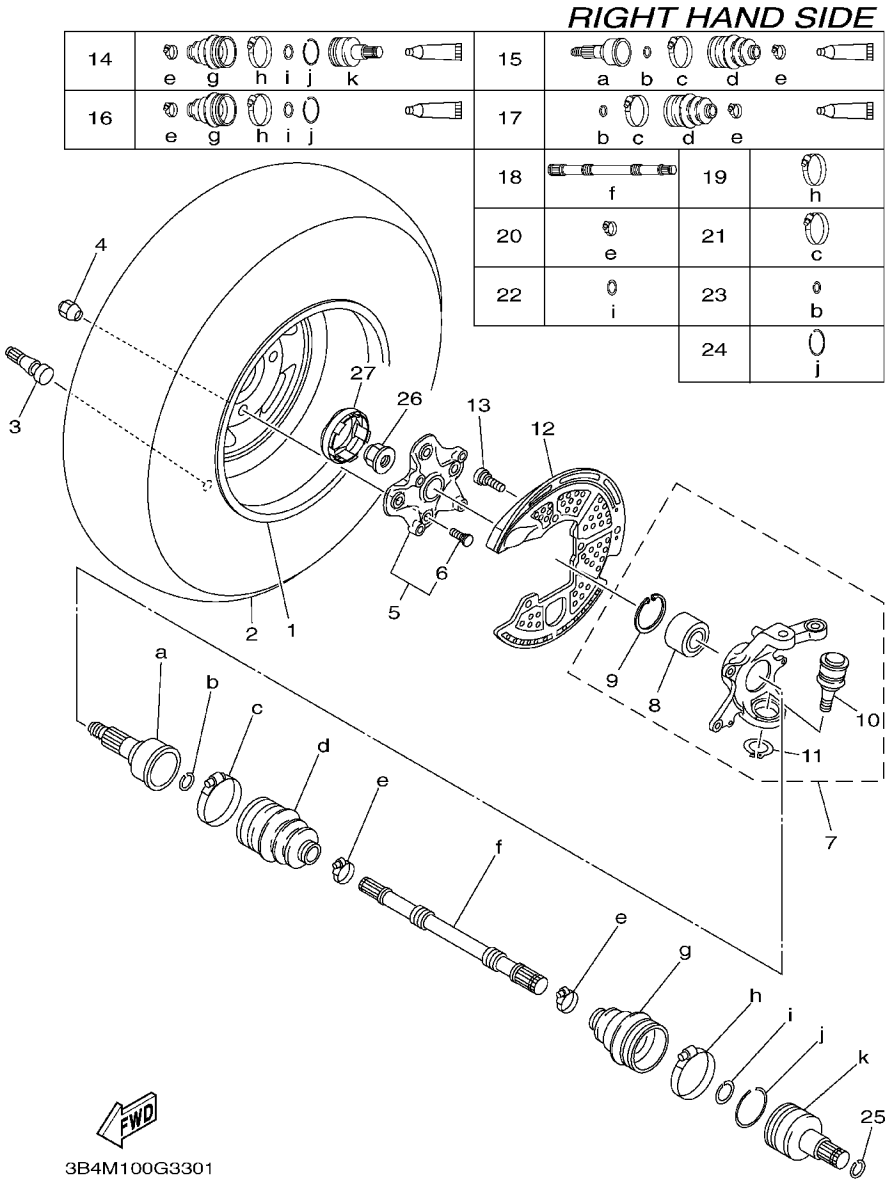

FIG. 33 FRONT WHEEL 2

REF. NO.	PART NO.	DESCRIPTION	USA	CAN	EUR	OCE		REMARKS
27	3B4–2530B–00	WHEEL CAP ASSY.	1	1	1	1		

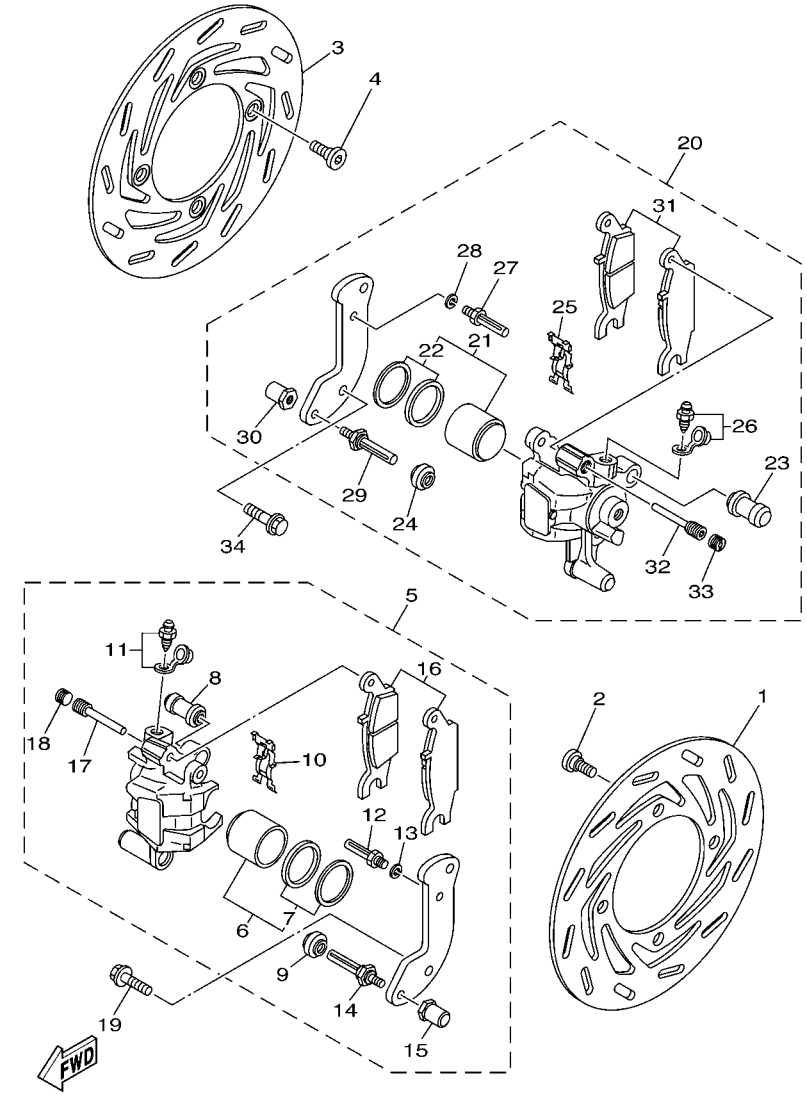

FIG. 34 FRONT BRAKE CALIPER

REF. NO.	PART NO.	DESCRIPTION	USA	CAN	EUR	OCE		REMARKS
1	3B4–2582T–01	DISC, BRAKE (LEFT)	1	1	1	1		
2	90109–08101	BOLT	4	4	4	4		
3	3B4–2582T–01	DISC, BRAKE (LEFT)	1	1	1	1		
4	90109–08101	BOLT	4	4	4	4		
5	3B4–2580T–01	CALIPER ASSY (LEFT)	1	1	1	1		
6	3B4–W0057–00	.PISTON ASSY, CALIPER	1	1	1	1		
7	3B4–W0047–00	..CALIPER SEAL KIT	1	1	1	1		
8	1UY–25937–51	.BOOT 2	1	1	1	1		
9	3JD–25917–00	.BOOT, CALIPER	1	1	1	1		
10	5DH–25919–00	.SUPPORT, PAD	1	1	1	1		
11	1UY–W0048–50	.BLEED SCREW KIT	1	1	1	1		
12	1UY–25926–51	.BOLT	1	1	1	1		
13	1UY–25938–51	.WASHER, SPRING	1	1	1	1		
14	3JD–25926–00	.BOLT	1	1	1	1		
15	3JD–25961–00	.NUT	1	1	1	1		
16	3B4–W0045–00	.BRAKE PAD KIT	1	1	1	1		
17	5DH–25933–00	.PIN, PAD	1	1	1	1		
18	8CR–25926–00	.BOLT	1	1	1	1		
19	90105–08161	BOLT, FLANGE	2	2	2	2		
20	3B4–2580U–01	CALIPER ASSY (RIGHT)	1	1	1	1		
21	3B4–W0057–00	.PISTON ASSY, CALIPER	1	1	1	1		
22	3B4–W0047–00	..CALIPER SEAL KIT	1	1	1	1		
23	1UY–25937–51	.BOOT 2	1	1	1	1		
24	3JD–25917–00	.BOOT, CALIPER	1	1	1	1		
25	5DH–25919–00	.SUPPORT, PAD	1	1	1	1		
26	1UY–W0048–50	.BLEED SCREW KIT	1	1	1	1		
27	1UY–25926–51	.BOLT	1	1	1	1		

FIG. 34 FRONT BRAKE CALIPER

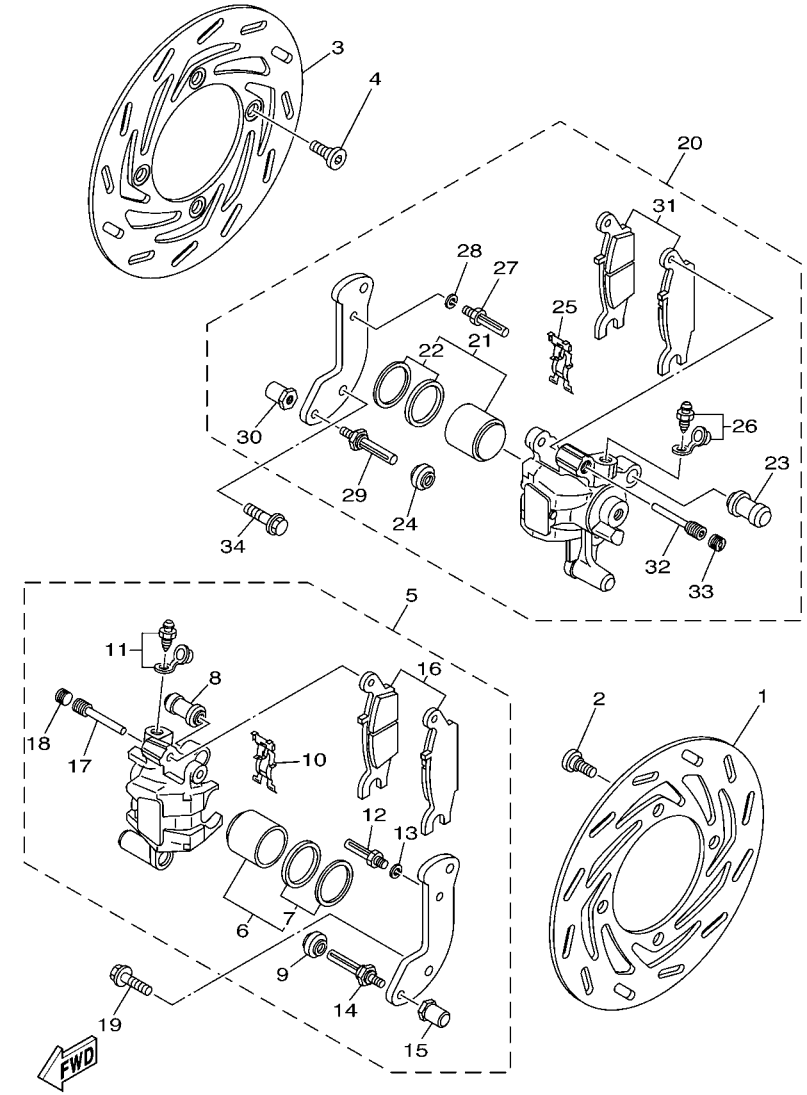

REF. NO.	PART NO.	DESCRIPTION	USA	CAN	EUR	OCE		REMARKS
28	1UY–25938–51	.WASHER, SPRING	1	1	1	1		
29	3JD–25926–00	.BOLT	1	1	1	1		
30	3JD–25961–00	.NUT	1	1	1	1		
31	3B4–W0045–10	.BRAKE PAD KIT	1	1	1	1		
32	5DH–25933–00	.PIN, PAD	1	1	1	1		
33	8CR–25926–00	.BOLT	1	1	1	1		
34	90105–08161	BOLT, FLANGE	2	2	2	2		

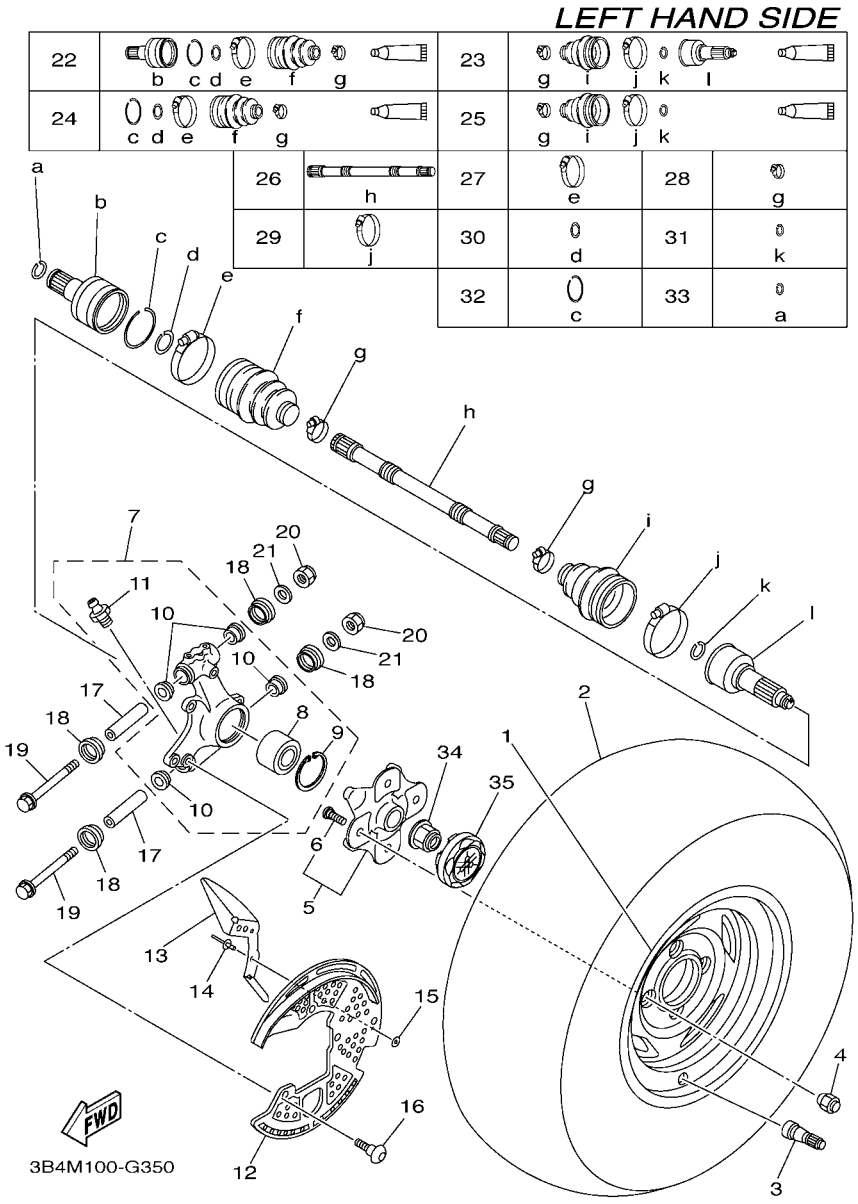

FIG. 35 REAR WHEEL

REF. NO.	PART NO.	DESCRIPTION	USA	CAN	EUR	OCE		REMARKS
1	3B4–25390–B0	REAR WHEEL COMP.	1	1	1	1		
2	94110–12012	TIRE (AT25X10-12** KT425T/L N)	1	1	1			DUNLOP
	94110–12008	TIRE(AT25X10-12,C828 4P/TL)				1		CHENG SHIN
3	93900–00030	VALVE, RIM (TR412)	1	1	1	1		TAIHEIYO
4	90179–10016	NUT	4	4	4	4		
5	3B4–25111–10	HUB, FRONT	1	1	1	1		
6	90114–10014	.BOLT, SERRATION	4	4	4	4		
7	3B4–2530F–00	REAR KNUCKLE ASSY	1	1	1	1		
8	93305–00602	.BEARING	1	1	1	1		
9	99009–55500	.CIRCLIP	1	1	1	1		
10	90381–17067	.BUSH, SOLID	4	4	4	4		
11	93700–06004	.NIPPLE, GREASE	2	2	2	2		
12	3B4–2514A–00	RING, WHEEL 1	1	1	1	1		
13	3B4–2539F–00	PLATE 1	1	1	1	1		
14	90267–47187	RIVET, BLIND	2	2	2	2		
15	90201–04027	WASHER, PLATE	2	2	2	2		
16	90154–06014	SCREW, BINDING	3	3	3	3		
17	5KM–23448–00	SPACER	2	2	2	2		
18	2NL–23517–00	COVER, THRUST 1	4	4	4	4		
19	90105–10185	BOLT, FLANGE	2	2	2	2		
20	90185–10012	NUT, SELF-LOCKING	2	2	2	2		
21	90201–10035	WASHER, PLATE	2	2	2	2		
22	3B4–2530V–00	DOUBLE OFF SET JOINT	1	1	1	1		
23	3B4–2510F–00	BALL JOINT SET	1	1	1	1		
24	3B4–2510H–00	BOOT SET(DOUBLE OFFSET JOINT)	1	1	1	1		
25	3B4–2510G–00	BOOT SET (BALL JOINT)	1	1	1	1		
26	3B4–2518E–10	SHAFT	1	1	1	1		

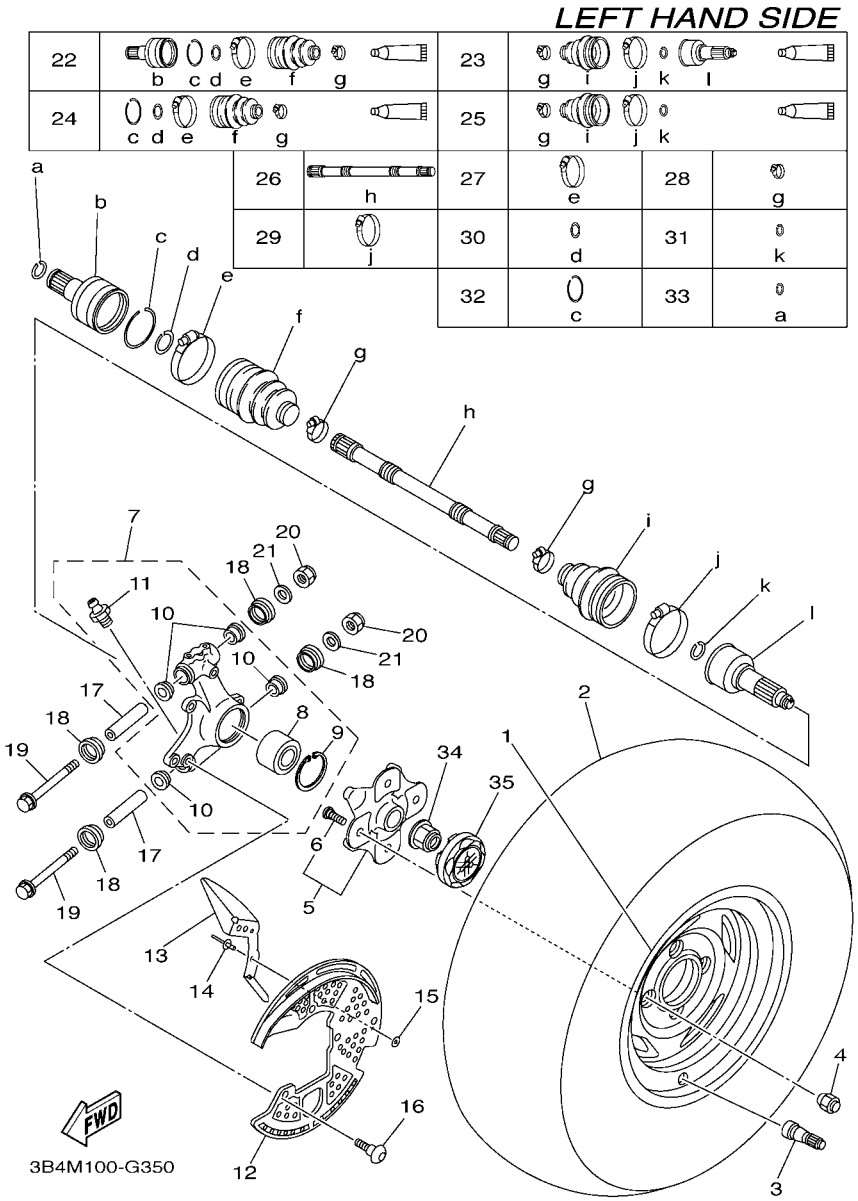

FIG. 35 REAR WHEEL

REF. NO.	PART NO.	DESCRIPTION	USA	CAN	EUR	OCE		REMARKS
27	3B4–2511H–00	BOOT BAND(DOUBLE OFFSET JOINT)	1	1	1	1		
28	3B4–2512G–00	BOOT BAND (SMALL)	2	2	2	2		
29	3B4–2511G–00	BOOT BAND (BALL JOINT)	1	1	1	1		
30	3B4–2512J–00	SNAP RING	1	1	1	1		
31	3B4–2512H–00	CIRCLIP	1	1	1	1		
32	3B4–25182–00	CIRCLIP	1	1	1	1		
33	3B4–2536E–00	CLIP, SPRING	1	1	1	1		
34	90179–20016	NUT	1	1	1	1		
35	3B4–2530B–00	WHEEL CAP ASSY.	1	1	1	1		

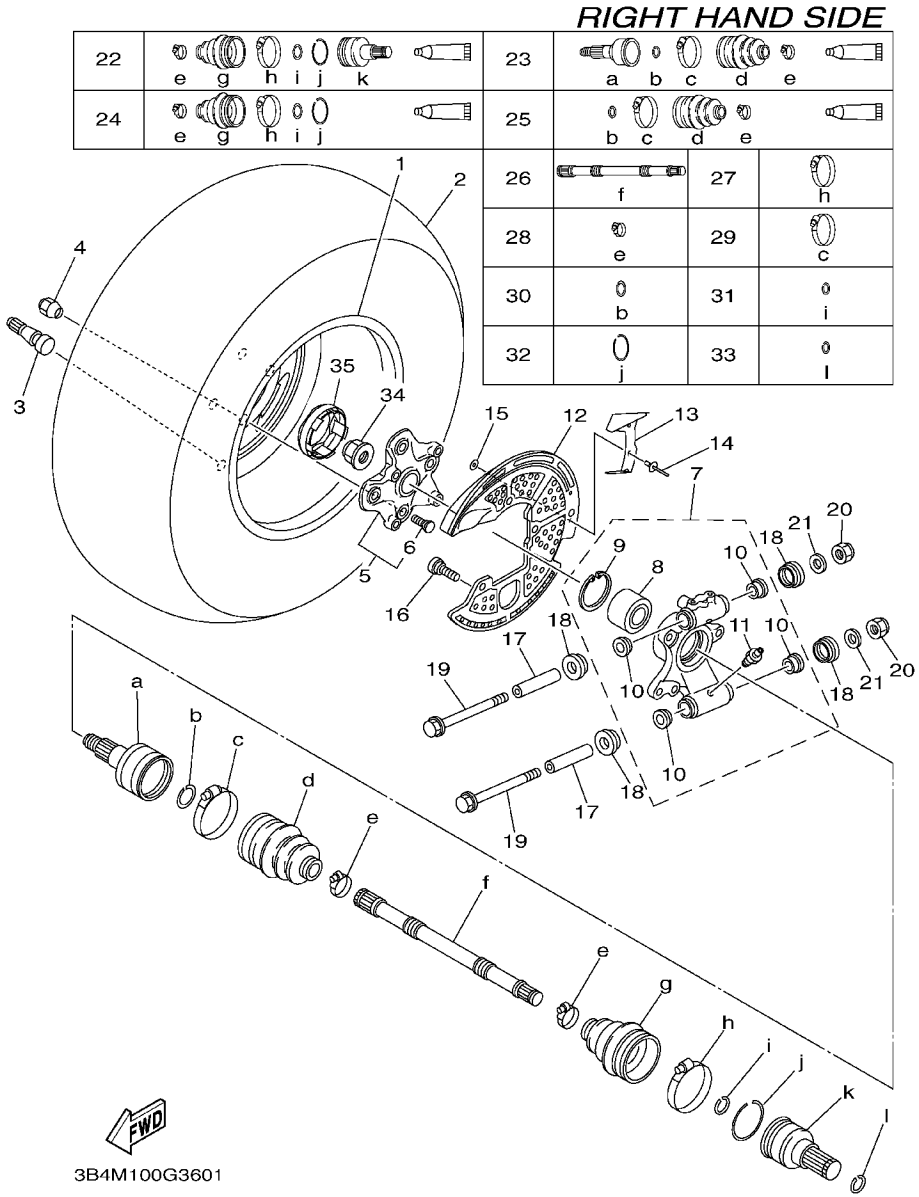

FIG. 36 REAR WHEEL 2

REF. NO.	PART NO.	DESCRIPTION	USA	CAN	EUR	OCE		REMARKS
1	3B4–25390–B0	REAR WHEEL COMP.	1	1	1	1		
2	94110–12012	TIRE (AT25X10-12** KT425T/L N)	1	1	1			DUNLOP
	94110–12008	TIRE(AT25X10-12,C828 4P/TL)				1		CHENG SHIN
3	93900–00030	VALVE, RIM (TR412)	1	1	1	1		TAIHEIYO
4	90179–10016	NUT	4	4	4	4		
5	3B4–25111–10	HUB, FRONT	1	1	1	1		
6	90114–10014	.BOLT, SERRATION	4	4	4	4		
7	3B4–2532F–00	REAR KNUCKLE ASSY.,2	1	1	1	1		
8	93305–00602	.BEARING	1	1	1	1		
9	99009–55500	.CIRCLIP	1	1	1	1		
10	90381–17067	.BUSH, SOLID	4	4	4	4		
11	93700–06004	.NIPPLE, GREASE	2	2	2	2		
12	3B4–2515A–00	RING, WHEEL 2	1	1	1	1		
13	3B4–2539G–00	PLATE 2	1	1	1	1		
14	90267–47187	RIVET, BLIND	2	2	2	2		
15	90201–04027	WASHER, PLATE	2	2	2	2		
16	90154–06014	SCREW, BINDING	3	3	3	3		
17	5KM–23448–00	SPACER	2	2	2	2		
18	2NL–23517–00	COVER, THRUST 1	4	4	4	4		
19	90105–10185	BOLT, FLANGE	2	2	2	2		
20	90185–10012	NUT, SELF-LOCKING	2	2	2	2		
21	90201–10035	WASHER, PLATE	2	2	2	2		
22	3B4–2530V–00	DOUBLE OFF SET JOINT	1	1	1	1		
23	3B4–2510F–00	BALL JOINT SET	1	1	1	1		
24	3B4–2510H–00	BOOT SET(DOUBLE OFFSET JOINT)	1	1	1	1		
25	3B4–2510G–00	BOOT SET (BALL JOINT)	1	1	1	1		
26	3B4–2518E–10	SHAFT	1	1	1	1		

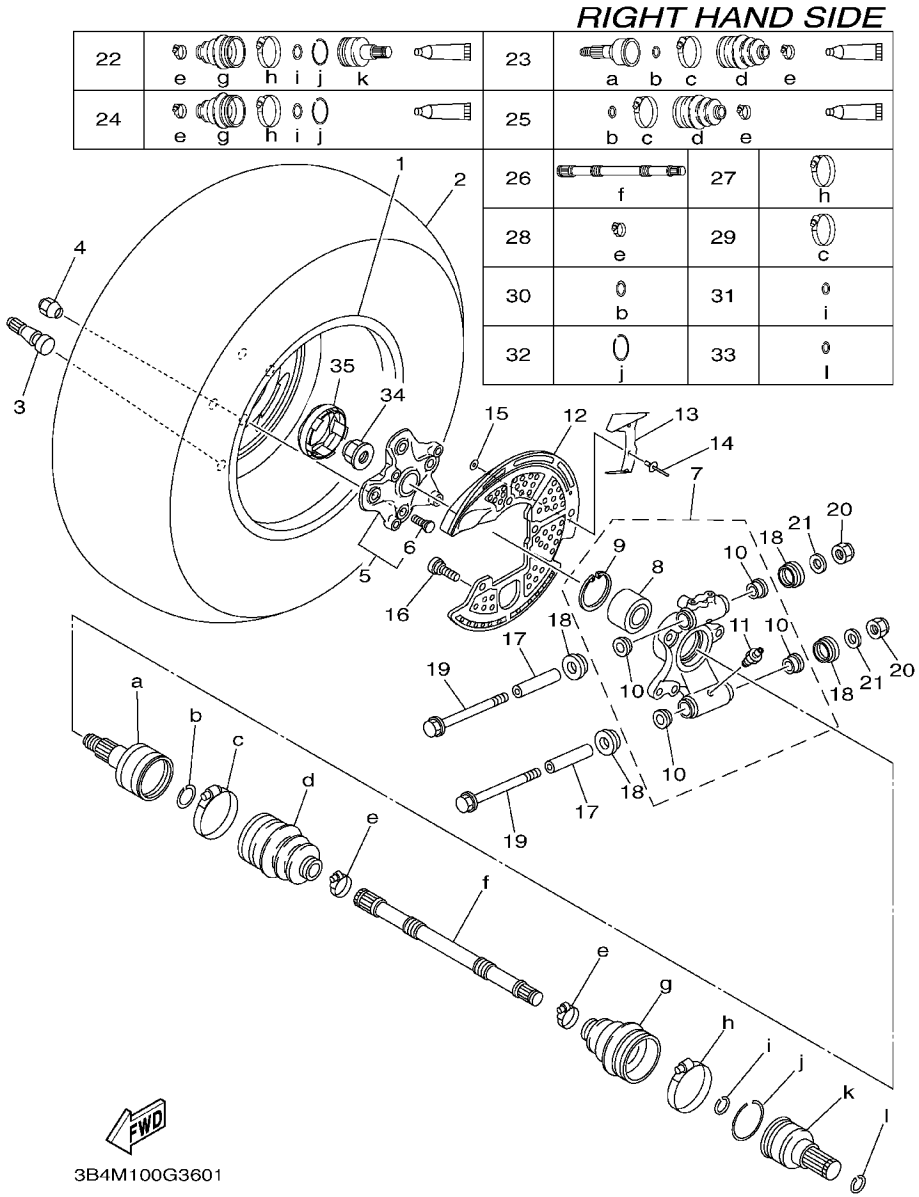

FIG. 36 REAR WHEEL 2

REF. NO.	PART NO.	DESCRIPTION	USA	CAN	EUR	OCE		REMARKS
27	3B4–2511H–00	BOOT BAND(DOUBLE OFFSET JOINT)	1	1	1	1		
28	3B4–2512G–00	BOOT BAND (SMALL)	2	2	2	2		
29	3B4–2511G–00	BOOT BAND (BALL JOINT)	1	1	1	1		
30	3B4–2512J–00	SNAP RING	1	1	1	1		
31	3B4–2512H–00	CIRCLIP	1	1	1	1		
32	3B4–25182–00	CIRCLIP	1	1	1	1		
33	3B4–2536E–00	CLIP, SPRING	1	1	1	1		
34	90179–20016	NUT	1	1	1	1		
35	3B4–2530B–00	WHEEL CAP ASSY.	1	1	1	1		

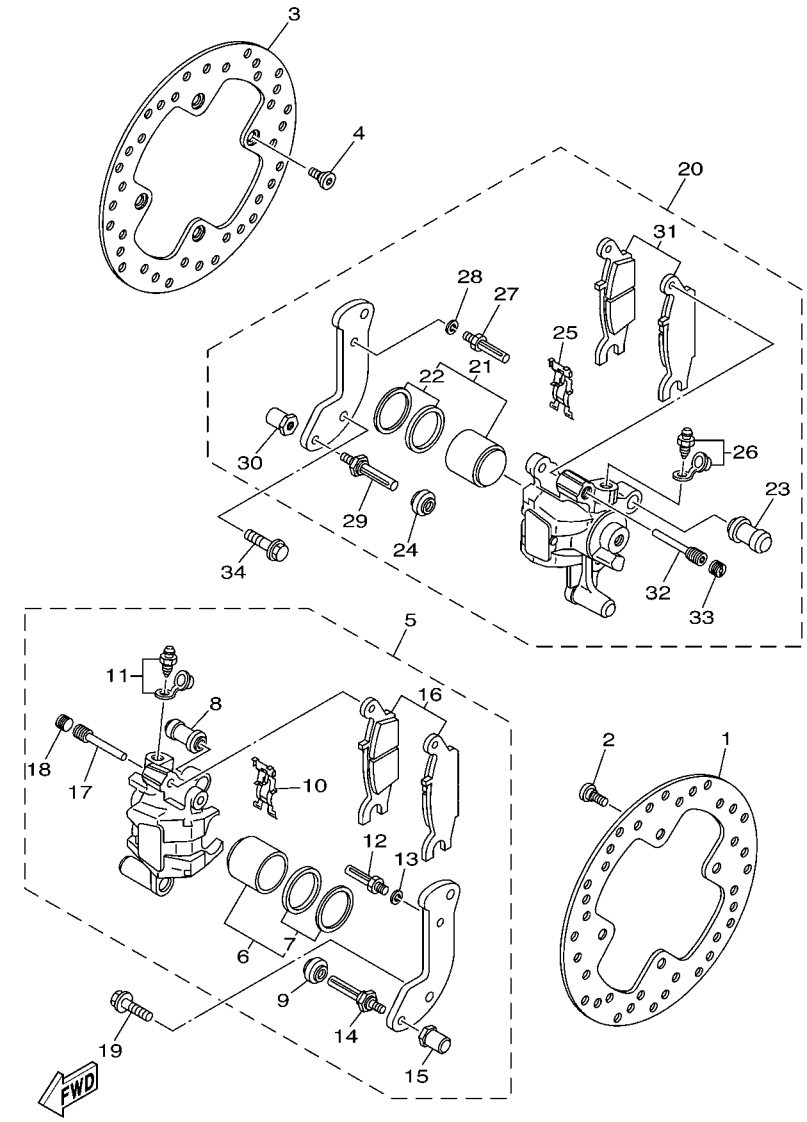

FIG. 37 REAR BRAKE CALIPER

REF. NO.	PART NO.	DESCRIPTION	USA	CAN	EUR	OCE		REMARKS
1	3B4–2582V–00	DISC, REAR BRAKE 1	1	1	1	1		
2	90109–08101	BOLT	4	4	4	4		
3	3B4–2582V–00	DISC, REAR BRAKE 1	1	1	1	1		
4	90109–08101	BOLT	4	4	4	4		
5	3B4–2580V–01	CALIPER ASSY, REAR 1	1	1	1	1		
6	3B4–W0057–10	.PISTON ASSY, CALIPER	1	1	1	1		
7	3B4–W0047–00	..CALIPER SEAL KIT	1	1	1	1		
8	1UY–25937–51	.BOOT 2	1	1	1	1		
9	3JD–25917–00	.BOOT, CALIPER	1	1	1	1		
10	5DH–25919–50	.SUPPORT, PAD	1	1	1	1		
11	1UY–W0048–50	.BLEED SCREW KIT	1	1	1	1		
12	1UY–25926–51	.BOLT	1	1	1	1		
13	1UY–25938–51	.WASHER, SPRING	1	1	1	1		
14	3JD–25926–00	.BOLT	1	1	1	1		
15	3JD–25961–00	.NUT	1	1	1	1		
16	3B4–W0046–00	.BRAKE PAD KIT 2	1	1	1	1		
17	3GD–25933–00	.PIN, PAD	1	1	1	1		
18	5DH–25916–00	.PLUG	1	1	1	1		
19	90105–08161	BOLT, FLANGE	2	2	2	2		
20	3B4–2580W–01	CALIPER ASSY, REAR 2	1	1	1	1		
21	3B4–W0057–10	.PISTON ASSY, CALIPER	1	1	1	1		
22	3B4–W0047–00	..CALIPER SEAL KIT	1	1	1	1		
23	1UY–25937–51	.BOOT 2	1	1	1	1		
24	3JD–25917–00	.BOOT, CALIPER	1	1	1	1		
25	5DH–25919–50	.SUPPORT, PAD	1	1	1	1		
26	1UY–W0048–50	.BLEED SCREW KIT	1	1	1	1		
27	1UY–25926–51	.BOLT	1	1	1	1		

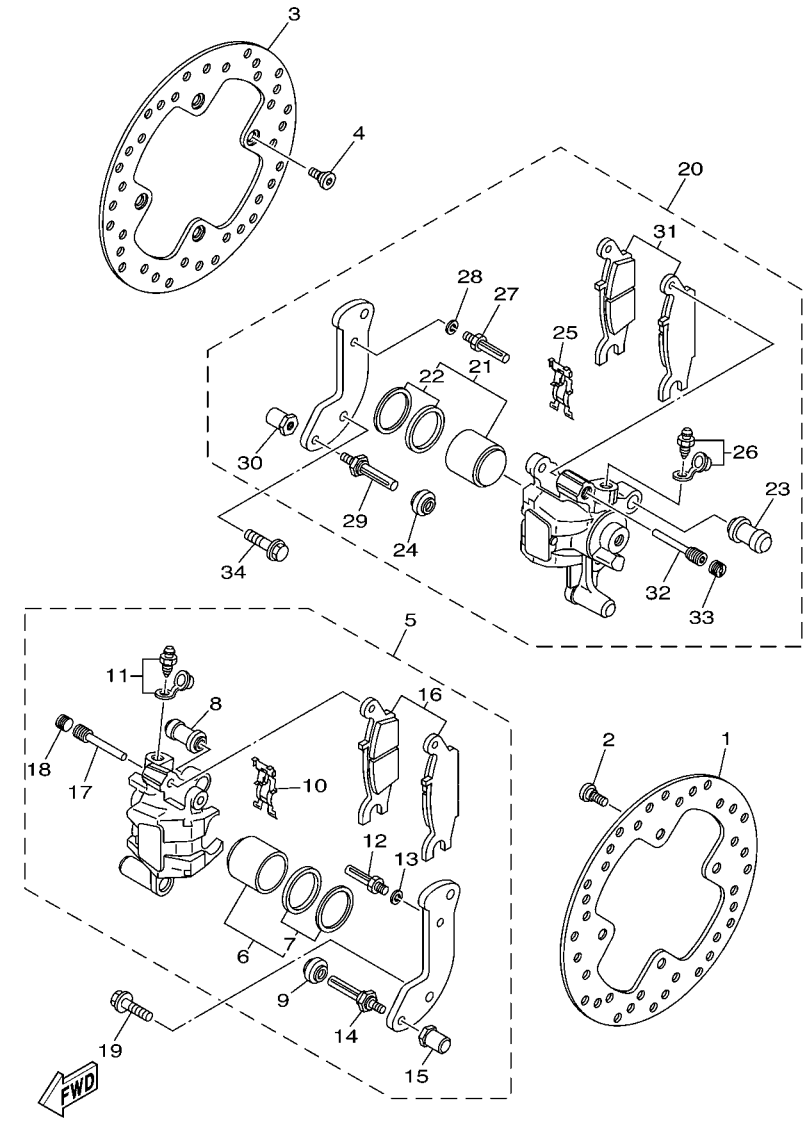

FIG. 37 REAR BRAKE CALIPER

REF. NO.	PART NO.	DESCRIPTION	USA	CAN	EUR	OCE		REMARKS
28	1UY–25938–51	.WASHER, SPRING	1	1	1	1		
29	3JD–25926–00	.BOLT	1	1	1	1		
30	3JD–25961–00	.NUT	1	1	1	1		
31	3B4–W0046–10	.BRAKE PAD KIT 2	1	1	1	1		
32	3GD–25933–00	.PIN, PAD	1	1	1	1		
33	5DH–25916–00	.PLUG	1	1	1	1		
34	90105–08161	BOLT, FLANGE	2	2	2	2		

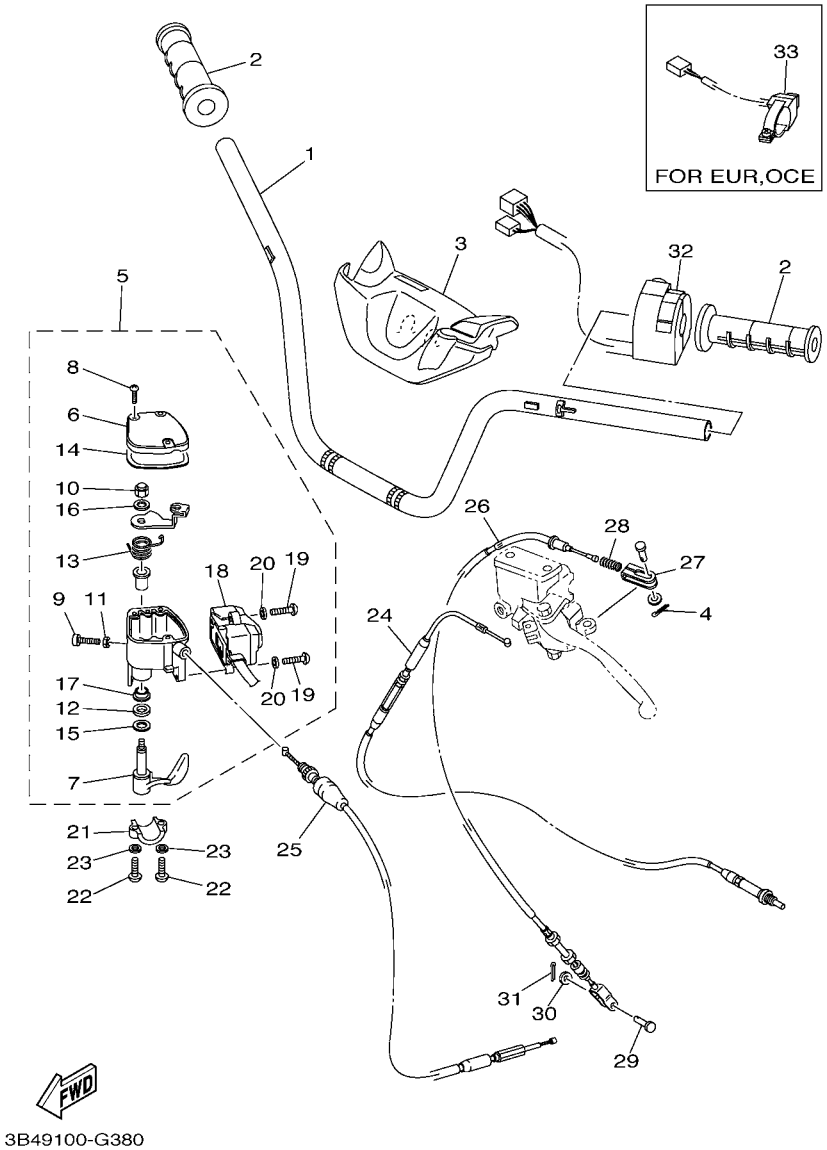

FIG. 38 STEERING HANDLE & CABLE

REF. NO.	PART NO.	DESCRIPTION	USA	CAN	EUR	OCE		REMARKS
1	3B4–26111–20	HANDLEBAR	1	1	1	1		
2	5LP–26241–00	GRIP	2	2	2	2		
3	3B4–26124–00	PROTECTOR, HANDLEBAR	1	1	1	1		
4	91401–16012	PIN, COTTER	1	1	1	1		
5	5KM–26250–20	THROTTLE LEVER ASSY	1	1	1	1		
6	4KB–2628F–10	.CAP, GEAR	1	1	1	1		
7	1NV–2625G–01	.LEVER, THROTTLE	1	1	1	1		
8	90149–04278	.SCREW	3	3	3	3		
9	98507–05020	.SCREW, PAN HEAD	1	1	1	1		
10	95607–05100	.NUT, U	1	1	1	1		
11	95307–05700	.NUT	1	1	1	1		
12	93104–09025	.OIL SEAL	1	1	1	1		
13	1NV–26304–00	.SPRING	1	1	1	1		
14	4KB–2628G–00	.GASKET	1	1	1	1		
15	1NV–26129–00	.WASHER	1	1	1	1		
16	1NV–26398–00	.WASHER	1	1	1	1		
17	1NV–2625K–00	.COLLAR	1	1	1	1		
18	5KM–83976–20	.SWITCH, HANDLE 1	1	1	1	1		
19	98507–04016	.SCREW, PAN HEAD	2	2	2	2		
20	92907–04600	.WASHER	2	2	2	2		
21	4V4–82913–00	HOLDER, LEVER LOWER 1	1	1	1	1		
22	98502–05020	SCREW, PAN HEAD	2	2	2	2		
23	92902–05600	WASHER, PLATE	2	2	2	2		
24	3B4–2637F–10	CABLE, CONTROL 2	1	1	1	1		
25	3B4–26311–10	CABLE, THROTTLE 1	1	1	1	1		
26	3B4–26341–00	WIRE, BRAKE 1	1	1	1	1		
27	3B4–26347–00	JOINT, CABLE	1	1	1	1		

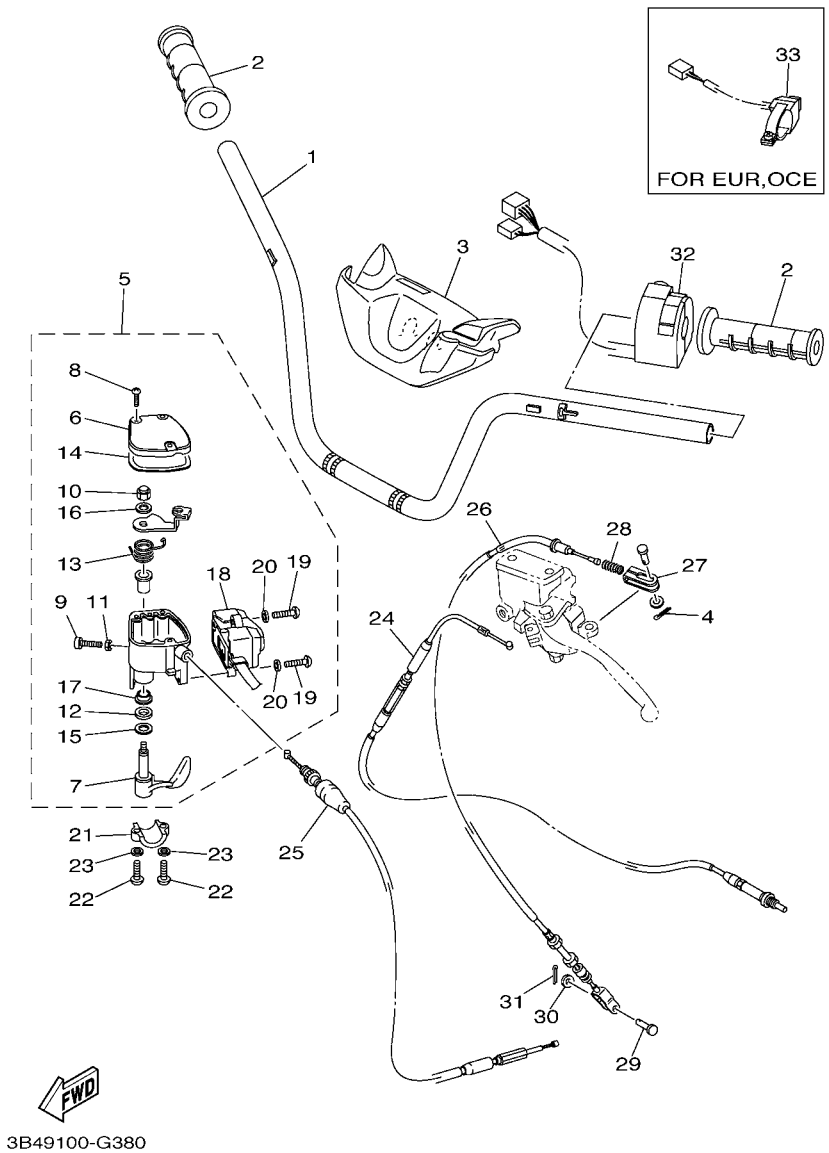

FIG. 38 STEERING HANDLE & CABLE

REF. NO.	PART NO.	DESCRIPTION	USA	CAN	EUR	OCE		REMARKS
28	90501–08665	SPRING, COMPRESSION	1	1	1	1		
29	90240–06076	PIN, CLEVIS	1	1	1	1		
30	92907–06200	WASHER	1	1	1	1		
31	91401–20012	PIN, COTTER	1	1	1	1		
32	3B4–83972–00	SWITCH, HANDLE 4	1	1	1	1		
33	3B4–83976–00	SWITCH, HANDLE 1			1	1		

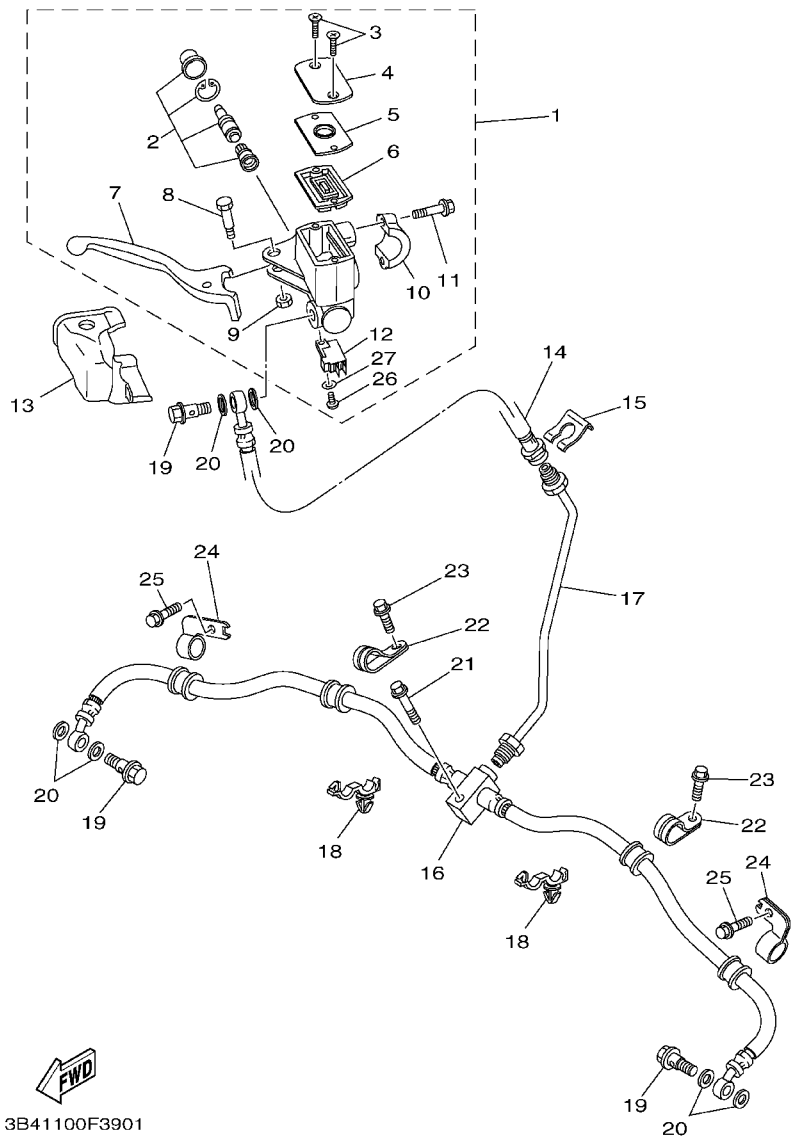

FIG. 39 FRONT MASTER CYLINDER

REF. NO.	PART NO.	DESCRIPTION	USA	CAN	EUR	OCE		REMARKS
1	3B4–2583T–00	MASTER CYLINDER ASSY	1	1	1	1		
2	5D3–W0041–00	.CYLINDER KIT, MASTER	1	1	1	1		
3	98706–04012	.SCREW, FLAT HEAD	2	2	2	2		
4	3GM–25852–22	.CAP, RESERVOIR	1	1	1	1		
5	3B4–2585B–00	.PLATE, DIAPHRAGM	1	1	1	1		
6	4TT–25854–00	.DIAPHRAGM, RESERVOIR	1	1	1	1		
7	3B4–83922–00	.LEVER 2	1	1	1	1		
8	3B4–2589F–00	.BOLT, LEVER	1	1	1	1		
9	95604–06100	.NUT, U	1	1	1	1		
10	56A–25867–00	.BRACKET, MASTER CYLINDER	1	1	1	1		
11	5EB–26332–00	.BOLT	2	2	2	2		
12	4HM–83980–00	.FRONT STOP SWITCH ASSY	1	1	1	1		
13	3B4–2637A–01	COVER, HANDLE LEVER 2	1	1	1	1		
14	3B4–25872–10	HOSE, BRAKE 1	1	1	1	1		
15	2GU–25866–00	CIRCLIP	1	1	1	1		
16	3B4–25873–10	HOSE, BRAKE 2	1	1	1	1		
17	3B4–25871–10	PIPE, BRAKE	1	1	1	1		
18	90464–20010	CLAMP	2	2	2	2		
19	90401–10015	BOLT, UNION	3	3	3	3		
20	90201–10118	WASHER, PLATE	6	6	6	6		
21	95822–06025	BOLT, FLANGE	1	1	1	1		
22	3B4–25886–00	HOLDER, BRAKE HOSE	2	2	2	2		
23	95802–06012	BOLT, FLANGE	2	2	2	2		
24	3B4–25876–10	HOLDER, BRAKE HOSE 2	2	2	2	2		
25	95802–06012	BOLT, FLANGE	2	2	2	2		
26	98502–04012	.SCREW, PAN HEAD	1	1	1	1		
27	92902–04600	.WASHER, PLATE	1	1	1	1		

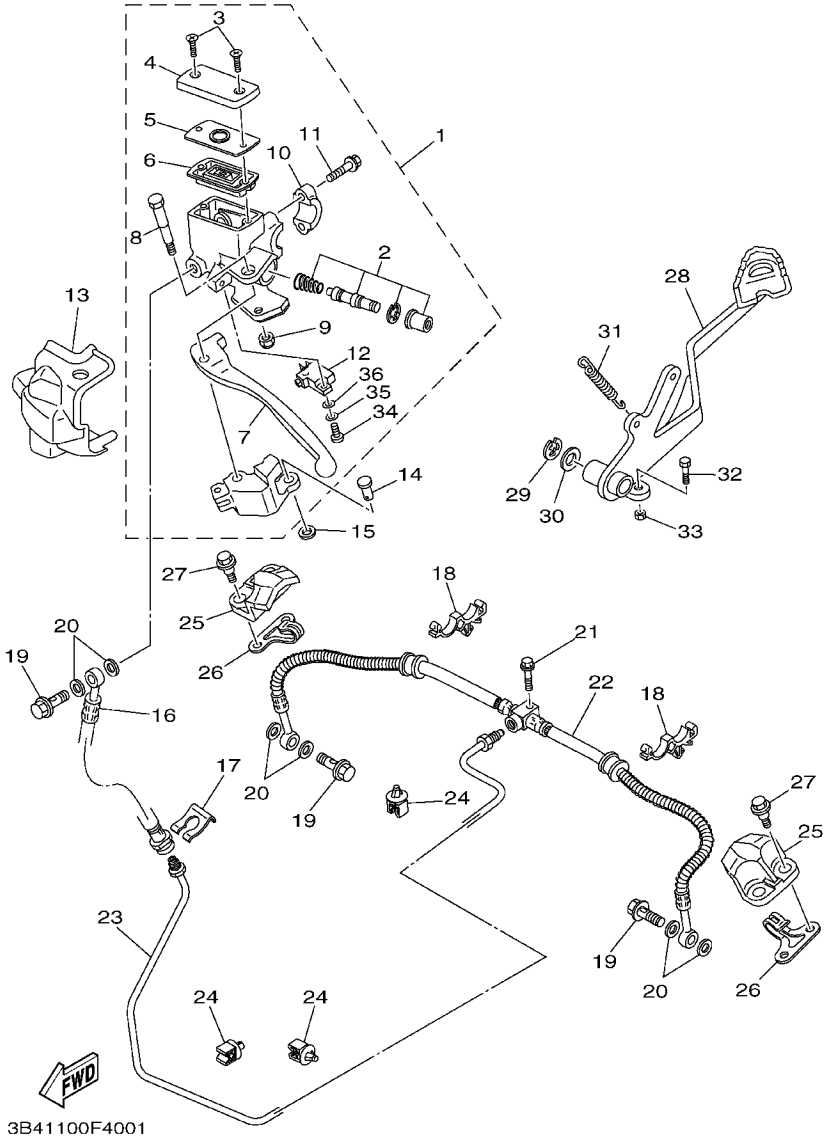

FIG. 40 REAR MASTER CYLINDER

REF. NO.	PART NO.	DESCRIPTION	USA	CAN	EUR	OCE		REMARKS
1	3B4–2583V–00	RR. MASTER CYLINDER ASSY.	1	1	1	1		
2	5LP–W0041–00	.CYLINDER KIT, MASTER	1	1	1	1		
3	98706–04012	.SCREW, FLAT HEAD	2	2	2	2		
4	3GM–25852–22	.CAP, RESERVOIR	1	1	1	1		
5	3B4–2585B–00	.PLATE, DIAPHRAGM	1	1	1	1		
6	4TT–25854–00	.DIAPHRAGM, RESERVOIR	1	1	1	1		
7	3B4–83912–00	.LEVER 1	1	1	1	1		
8	3B4–2589F–10	.BOLT, LEVER	1	1	1	1		
9	3B4–26294–00	.NUT 1	1	1	1	1		
10	56A–25867–00	.BRACKET, MASTER CYLINDER	1	1	1	1		
11	5EB–26332–00	.BOLT	2	2	2	2		
12	3B4–83980–00	.FRONT STOP SWITCH ASSY	1	1	1	1		
13	3B4–26372–00	COVER, HANDLE LEVER 1	1	1	1	1		
14	90240–08013	PIN, CLEVIS	1	1	1	1		
15	92902–08600	WASHER, PLATE	1	1	1	1		
16	3B4–25872–10	HOSE, BRAKE 1	1	1	1	1		
17	2GU–25866–00	CIRCLIP	1	1	1	1		
18	90464–16006	CLAMP	2	2	2	2		
19	90401–10015	BOLT, UNION	3	3	3	3		
20	90201–10118	WASHER, PLATE	6	6	6	6		
21	95822–06025	BOLT, FLANGE	1	1	1	1		
22	3B4–25874–10	HOSE, BRAKE	1	1	1	1		
23	3B4–25882–10	PIPE, BRAKE 2	1	1	1	1		
24	5KM–81677–00	CLAMP 1	4	4	4	4		
25	3B4–25715–00	COVER 1	2	2	2	2		
26	3B4–2588F–00	HOLDER, BRAKE HOSE 5	2	2	2	2		
27	90109–06172	BOLT	4	4	4	4		

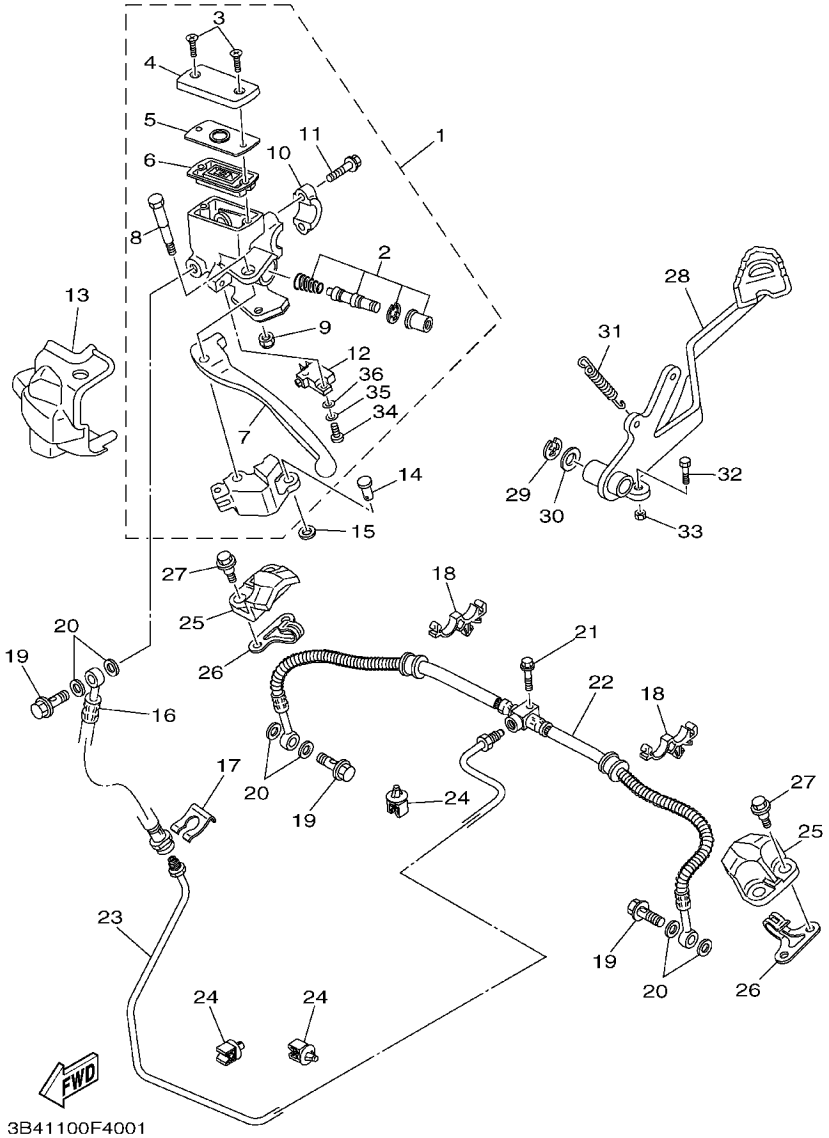

FIG. 40 REAR MASTER CYLINDER

REF. NO.	PART NO.	DESCRIPTION	USA	CAN	EUR	OCE		REMARKS
28	3B4–27211–00	PEDAL, BRAKE	1	1	1	1		
29	99001–10600	CIRCLIP	1	1	1	1		
30	90201–14023	WASHER, PLATE	1	1	1	1		
31	90506–16318	SPRING, TENSION	1	1	1	1		
32	97022–06014	BOLT	1	1	1	1		
33	95312–06600	NUT	1	1	1	1		
34	98502–04012	.SCREW, PAN HEAD	1	1	1	1		
35	92902–04100	.WASHER, SPRING	1	1	1	1		
36	92902–04600	.WASHER, PLATE	1	1	1	1		

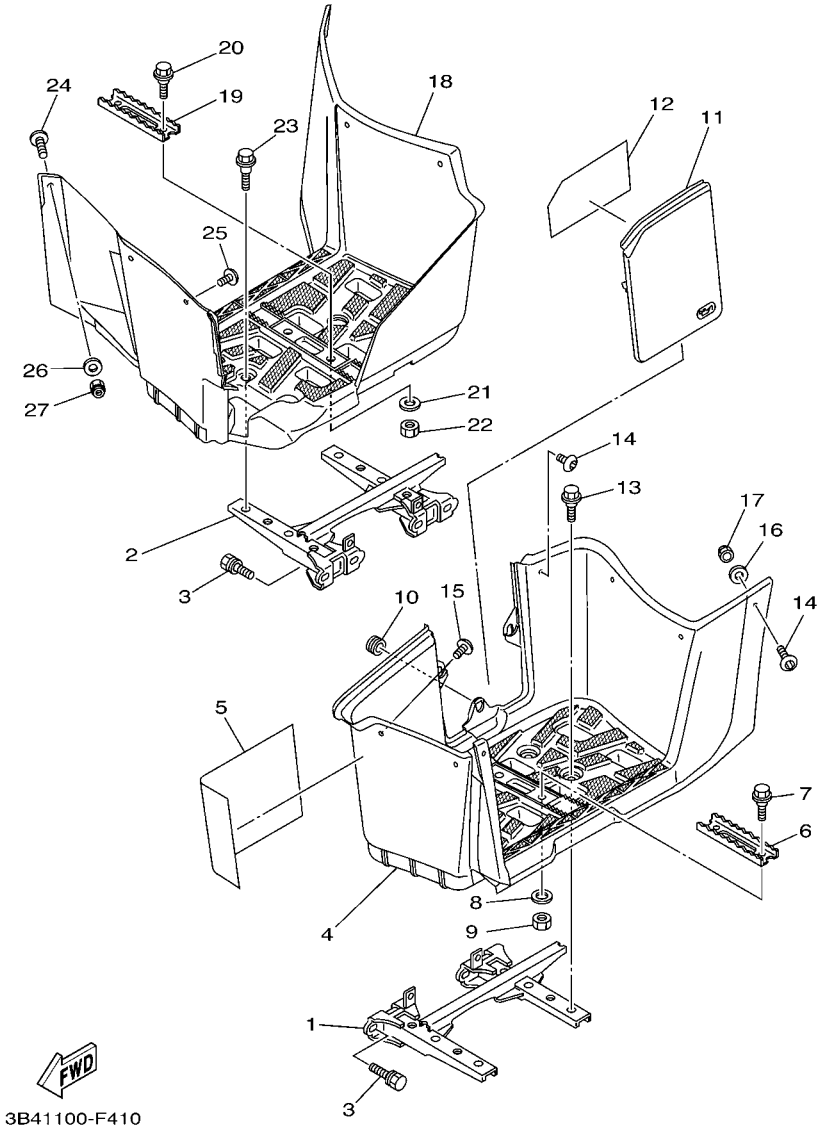

FIG. 41 STAND & FOOTREST

REF. NO.	PART NO.	DESCRIPTION	USA	CAN	EUR	OCE		REMARKS
1	3B4–27452–00	BRACKET, FOOTREST 1	1	1	1	1		
2	3B4–27462–00	BRACKET, FOOTREST 2	1	1	1	1		
3	90119–10044	BOLT, WITH WASHER	8	8	8	8		
4	3B4–27453–01	COVER 1	1	1	1	1		
5	3B4–21732–00	SEAL 1	1	1	1	1		
6	5GH–2741A–10	ARM 1	1	1	1	1		
7	90109–06214	BOLT	2	2	2	2		
8	90201–06033	WASHER, PLATE	2	2	2	2		
9	95312–06600	NUT	2	2	2	2		
10	90480–14532	GROMMET	1	1	1	1		
11	3B4–28239–00	COVER 3	1	1	1	1		
12	3B4–21735–00	SEAL 2	1	1	1	1		
13	90109–06172	BOLT	4	4	4	4		
14	90110–06200	BOLT, HEXAGON SOCKET HEAD	6	6	6	6		
15	90111–06086	BOLT,HEX. SOCKET BUTTON	1	1	1	1		
16	90201–06078	WASHER, PLATE	6	6	6	6		
17	95702–06300	NUT, NYLON	6	6	6	6		
18	3B4–27463–01	COVER 2	1	1	1	1		
19	5GH–2741A–10	ARM 1	1	1	1	1		
20	90109–06214	BOLT	2	2	2	2		
21	90201–06033	WASHER, PLATE	2	2	2	2		
22	95312–06600	NUT	2	2	2	2		
23	90109–06172	BOLT	4	4	4	4		
24	90110–06200	BOLT, HEXAGON SOCKET HEAD	5	5	5	5		
25	90111–06086	BOLT,HEX. SOCKET BUTTON	1	1	1	1		
26	90201–06078	WASHER, PLATE	6	6	6	6		
27	95702–06300	NUT, NYLON	6	6	6	6		

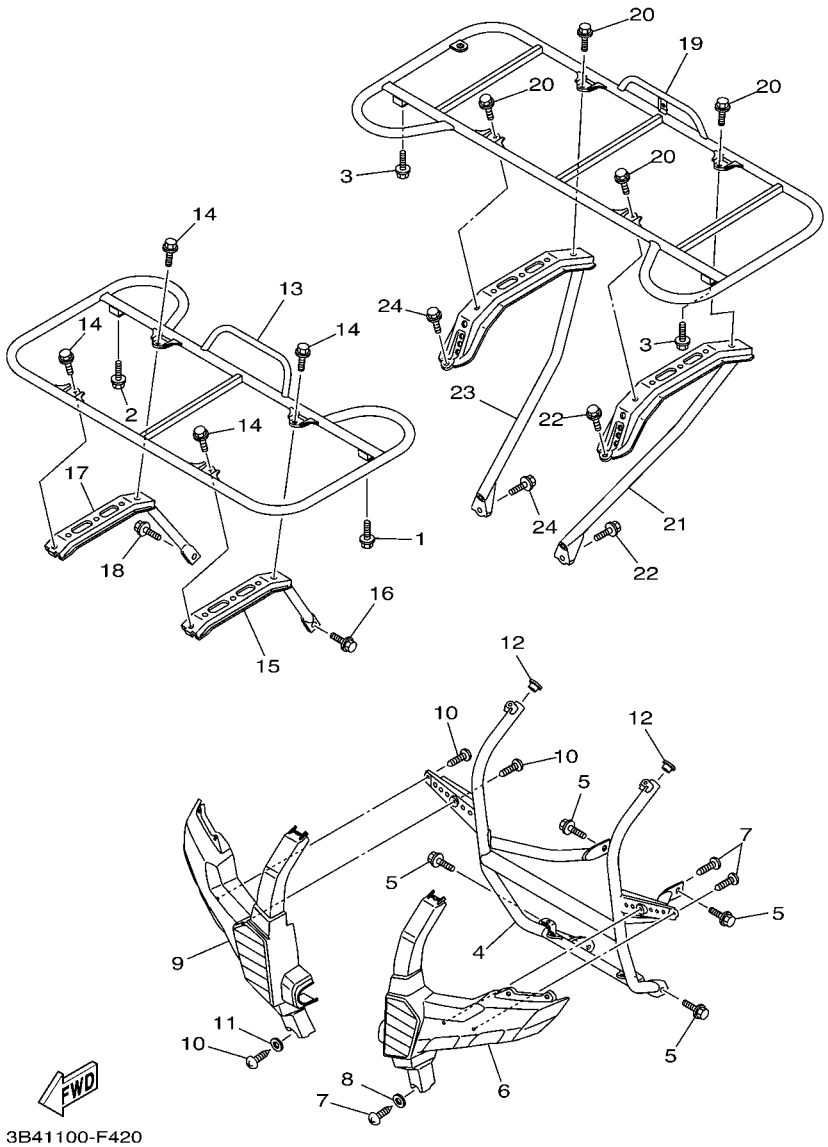

FIG. 42 GUARD

REF. NO.	PART NO.	DESCRIPTION	USA	CAN	EUR	OCE		REMARKS
1	90119–06152	BOLT, WITH WASHER	1	1	1	1		
2	90119–06152	BOLT, WITH WASHER	1	1	1	1		
3	90119–06152	BOLT, WITH WASHER	2	2	2	2		
4	3B4–2845N–00	BAR, CARRY FRONT	1	1	1	1		
5	95812–08014	BOLT, FLANGE	4	4	4	4		
6	3B4–2842M–00	COVER 1	1		1	1		
	3B4–2842M–10	COVER 1		1				
7	97702–50516	SCREW, TAPPING	3	3	3	3		
8	92902–05200	WASHER	1	1	1	1		
9	3B4–2842N–00	COVER 2	1		1	1		
	3B4–2842N–10	COVER 2		1				
10	97702–50516	SCREW, TAPPING	3	3	3	3		
11	92902–05200	WASHER	1	1	1	1		
12	90338–18122	PLUG	2	2	2	2		
13	3B4–24841–00	CARRIER, FRONT	1	1	1	1		
14	95812–08014	BOLT, FLANGE	4	4	4	4		
15	3B4–24821–00	STAY, FRONT CARRIER 1	1	1	1	1		
16	90119–08118	BOLT, WITH WASHER	1	1	1	1		
17	3B4–24822–00	STAY, FRONT CARRIER 2	1	1	1	1		
18	90119–08118	BOLT, WITH WASHER	1	1	1	1		
19	3B4–24842–00	CARRIER, REAR	1		1	1		
	3B4–24842–10	CARRIER, REAR		1				
20	95812–08014	BOLT, FLANGE	4	4	4	4		
21	3B4–2482J–01	FRAME, CARRIER 1	1	1	1	1		
22	90119–10044	BOLT, WITH WASHER	2	2	2	2		
23	3B4–2482K–01	FRAME, CARRIER 2	1	1	1	1		
24	90119–10044	BOLT, WITH WASHER	2	2	2	2		

FIG. 43 GENERATOR

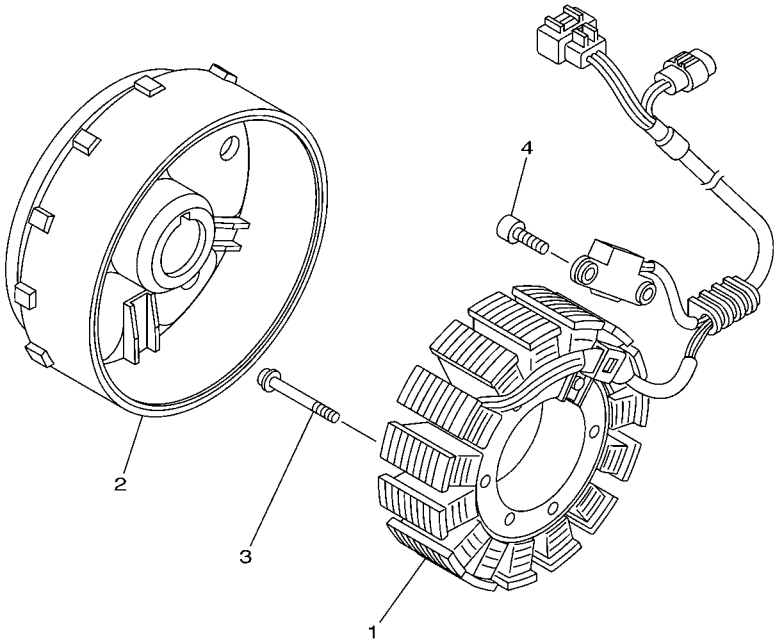

3B41100-F430

REF. NO.	PART NO.	DESCRIPTION	USA	CAN	EUR	OCE		REMARKS
1	3B4–81410–00	STATOR ASSY	1	1	1	1		
2	3B4–81450–00	ROTOR ASSY	1	1	1	1		
3	92012–06030	BOLT, BUTTON HEAD	3	3	3	3		
4	90110–05031	BOLT, HEXAGON SOCKET HEAD	2	2	2	2		

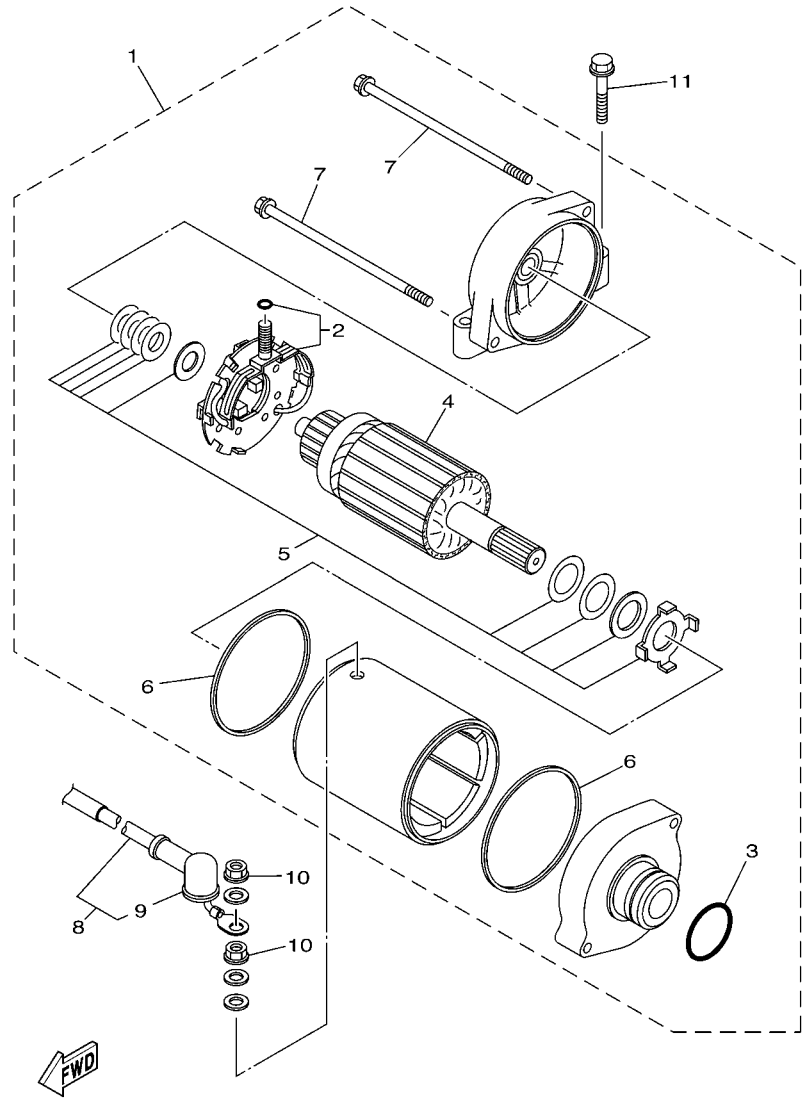

FIG. 44 STARTING MOTOR

REF. NO.	PART NO.	DESCRIPTION	USA	CAN	EUR	OCE		REMARKS
1	1S3–81890–00	MOTOR ASSY	1	1	1	1		
2	3AJ–81801–00	.BRUSH SET	1	1	1	1		
3	1FK–81847–00	.O-RING	1	1	1	1		
4	4NK–81850–00	.ARMATURE ASSY	1	1	1	1		
5	3KS–81809–00	.WASHER KIT	1	1	1	1		
6	11H–81844–00	.GASKET	2	2	2	2		
7	3AJ–81826–00	.BOLT	2	2	2	2		
8	3B4–81815–00	CORD, STARTER MOTOR	1	1	1	1		
9	4G0–81871–00	.CAP	1	1	1	1		
10	4XV–8182A–00	NUT	2	2	2	2		
11	95022–06030	BOLT, FLANGE	2	2	2	2		

FIG. 45 METER

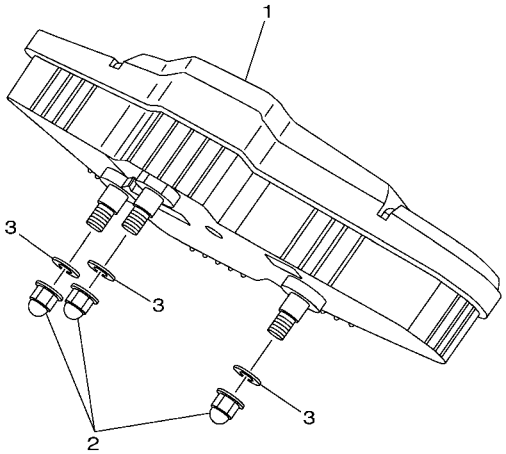

3B49100-G450

REF. NO.	PART NO.	DESCRIPTION	USA	CAN	EUR	OCE		REMARKS
1	3B4–83500–01	METER ASSY	1					MILE/H
	3B4–83500–11	METER ASSY		1	1	1		KM/H
2	95302–05800	NUT, CROWN	3	3	3	3		
3	90201–05039	WASHER, PLATE	3	3	3	3		

FIG. 46 HEADLIGHT

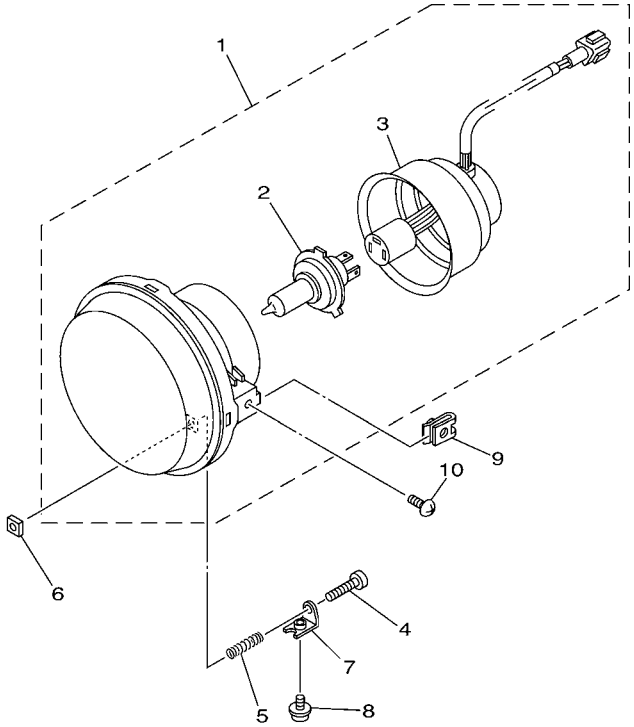

3B41100-F460

REF. NO.	PART NO.	DESCRIPTION	USA	CAN	EUR	OCE		REMARKS
1	3B4–84300–00	HEADLIGHT ASSY	2	2	2	2		
2	3B4–84314–00	.BULB, HEADLIGHT (12V 35/35W)	1	1	1	1		
3	3B4–84340–00	.SOCKET CORD ASSY 1	1	1	1	1		
4	98502–03530	SCREW, PAN HEAD	2	2	2	2		
5	90501–05764	SPRING, COMPRESSION	2	2	2	2		
6	2GU–84334–00	NUT, ADJUSTING	2	2	2	2		
7	5GH–84703–10	BRACKET	2	2	2	2		
8	90159–05044	SCREW, WITH WASHER	2	2	2	2		
9	90183–05008	NUT, SPRING	4	4	4	4		
10	90154–05021	SCREW, BINDING	4	4	4	4		

FIG. 47 TAILLIGHT

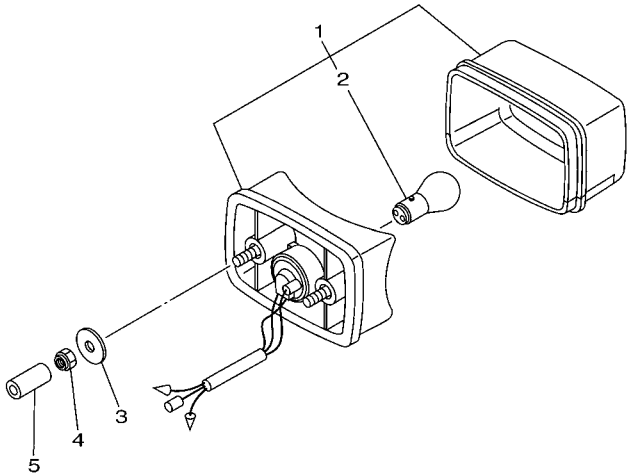

3B41100-F470

REF. NO.	PART NO.	DESCRIPTION	USA	CAN	EUR	OCE		REMARKS
1	3FA–84710–00	TAILLIGHT UNIT ASSY	1		1	1		
2	1A2–84714–41	.BULB (12V-21/5W)	1		1	1		
3	90201–06097	WASHER, PLATE	2		2	2		
4	95702–06300	NUT, NYLON	2		2	2		
5	90445–09220	HOSE (L30)	1		1	1		

FIG. 48 TAILLIGHT 2

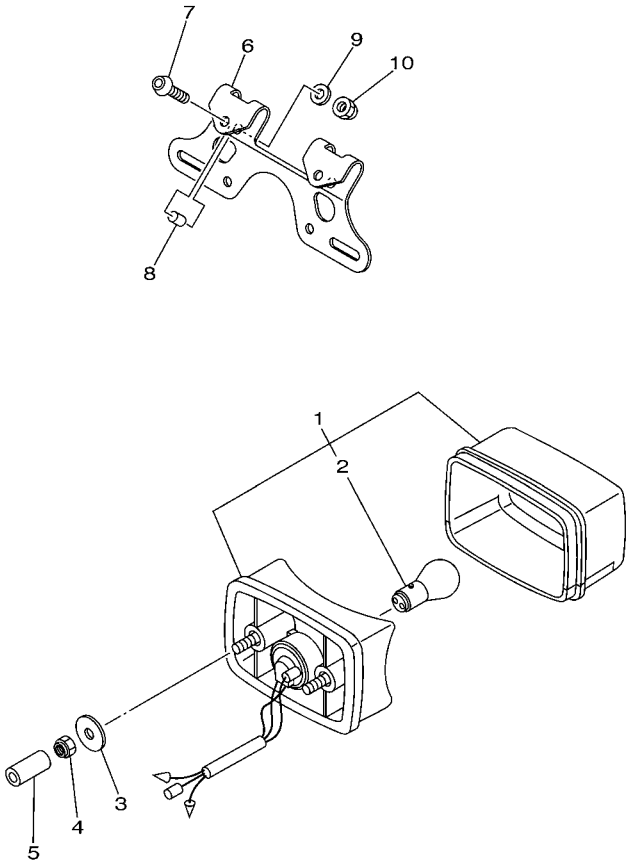

REF. NO.	PART NO.	DESCRIPTION	USA	CAN	EUR	OCE		REMARKS
1	3FA–84710–00	TAILLIGHT UNIT ASSY		1				
2	1A2–84714–41	.BULB (12V-21/5W)		1				
3	90201–06097	WASHER, PLATE		2				
4	95702–06300	NUT, NYLON		2				
5	90445–09220	HOSE (L30)		1				
6	3B4–84751–00	BRACKET, LICENSE		1				
7	92012–06030	BOLT, BUTTON HEAD		2				
8	90387–065G1	COLLAR		2				
9	92902–06600	WASHER, PLATE		2				
10	95302–06800	NUT, CROWN		2				

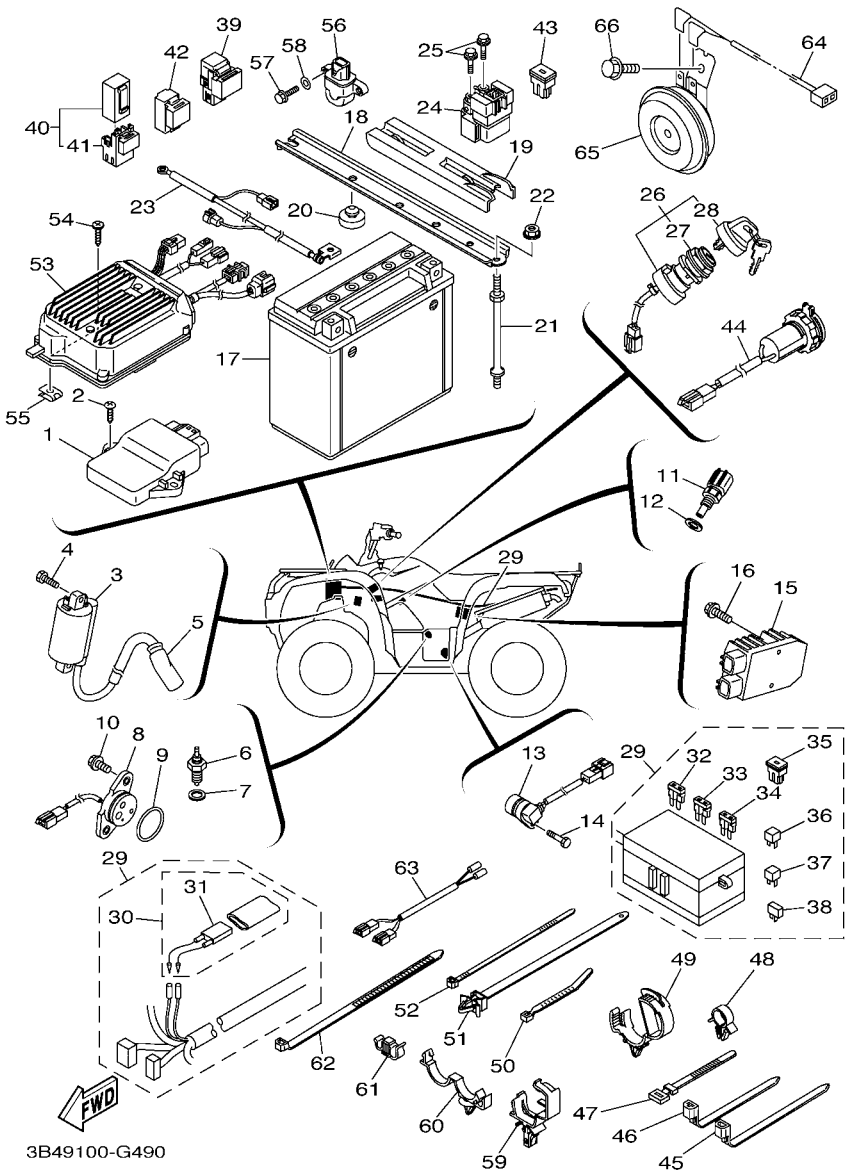

FIG. 49 ELECTRICAL 1

REF. NO.	PART NO.	DESCRIPTION	USA	CAN	EUR	OCE		REMARKS
1	3B4–8591A–10	ENGINE CONTROL UNIT ASSY	1	1	1	1		
2	97702–60025	SCREW, TAPPING	2	2	2	2		
3	1D7–82310–00	IGNITION COIL ASSY	1	1	1	1		
4	97002–06016	BOLT	2	2	2	2		
5	5VK–82370–00	PLUG CAP ASSY	1	1	1	1		
6	3GB–82540–01	NEUTRAL SWITCH ASSY	1	1	1	1		
7	90430–10148	GASKET	1	1	1	1		
8	3B4–82540–01	NEUTRAL SWITCH ASSY	1	1	1	1		
9	93210–29196	O-RING	1	1	1	1		
10	90119–06137	BOLT, WITH WASHER	2	2	2	2		
11	8CC–85790–01	THERMOSENSOR ASSY	1	1	1	1		
12	90430–12202	GASKET	1	1	1	1		
13	3B4–83755–00	SENSOR, SPEED	1	1	1	1		
14	91312–06020	BOLT	1	1	1	1		
15	1D7–81960–00	RECTIFIER & REGULATOR ASSY	1	1	1	1		
16	95802–06020	BOLT, FLANGE	2	2	2	2		
17	4SH–82100–22	BATTERY ASSY (YUASA YTX20L-BS)	1	1	1	1		
18	3B4–82128–00	BRACKET, BATTERY	1	1	1	1		
19	3B4–82129–00	COVER, BATTERY	1	1	1	1		
20	22W–24741–00	PAD, SEAT	2	2	2	2		
21	3B4–82133–10	SCREW, FITTING	2	2	2	2		
22	95702–06500	NUT, WITH WASHER	2	2	2	2		
23	3B4–82116–10	WIRE, MINUS LEAD	1	1	1	1		
24	3B4–81940–00	STARTER RELAY ASSY	1	1	1	1		
25	95022–06008	BOLT, FLANGE	2	2	2	2		
26	3B4–82510–00	MAIN SWITCH ASSY	1	1	1	1		
27	3HN–82569–00	.NUT, MAIN SWITCH	1	1	1	1		

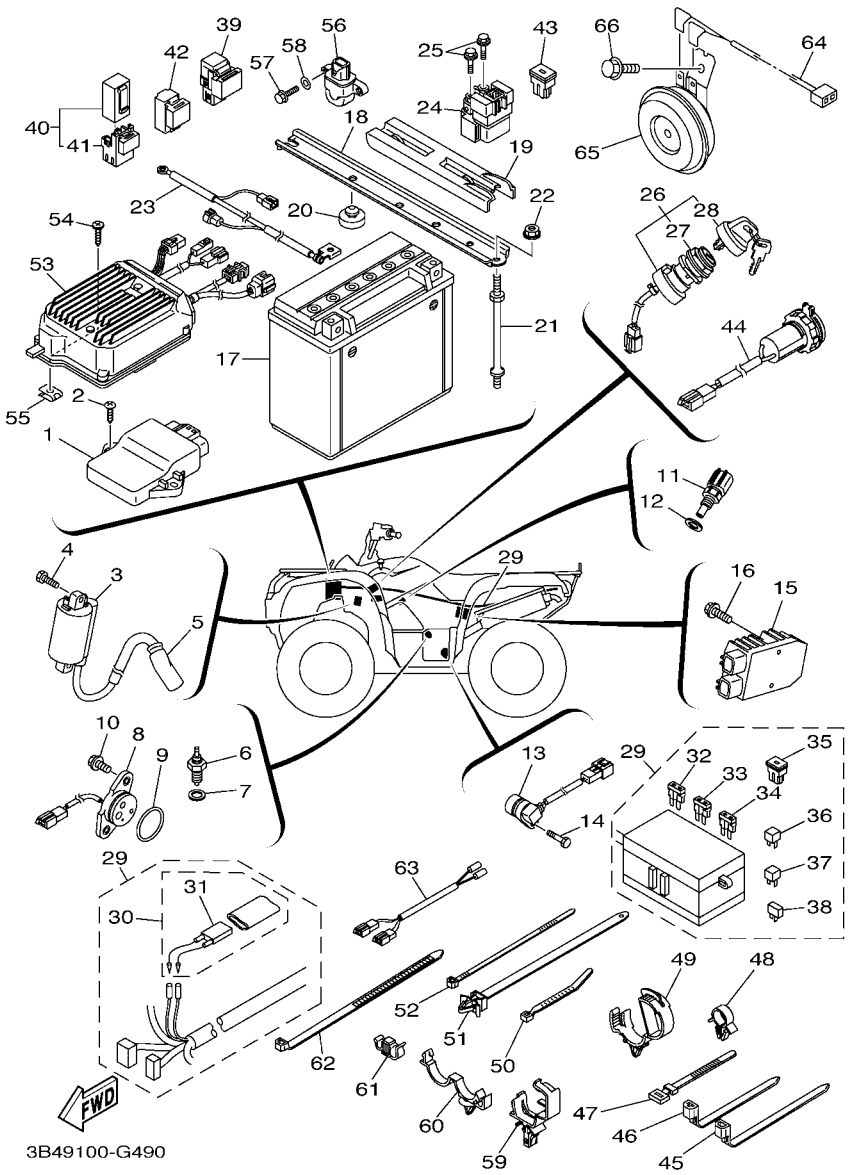

FIG. 49 ELECTRICAL 1

REF. NO.	PART NO.	DESCRIPTION	USA	CAN	EUR	OCE		REMARKS
28	3HN–82579–00	.CAP, KEY	1	1	1	1		
29	3B4–82590–20	WIRE HARNESS ASSY	1	1				
	3B4–82590–30	WIRE HARNESS ASSY			1	1		
30	4GB–82180–00	.CIRCUIT BREAKER ASSY	1	1	1	1		
31	4GB–82560–00	..THERMO SWITCH ASSY	1	1	1	1		
32	5JJ–82151–10	.FUSE (15A-BL)	4	4	4	4		
33	5JJ–82151–30	.FUSE (10A-BL)	3	3	3	3		
34	5JJ–82151–90	.FUSE (5A-BL)	2	2	2	2		
35	5PS–82151–00	.FUSE (40A)	2	2	2	2		
36	4WA–81980–00	.DIODE ASSY	1	1	1	1		
37	5TJ–81980–00	.DIODE ASSY	1	1	1	1		
38	5VG–81980–00	.DIODE ASSY	1	1	1	1		
39	5DM–81950–00	RELAY ASSY	3	3	3	3		
40	5EA–81950–20	RELAY ASSY	4	4	4	4		
41	5EA–81952–00	.HOLDER, RELAY	1	1	1	1		
42	29U–81950–93	RELAY ASSY	1	1	1	1		
43	5PS–82151–00	FUSE (40A)	1	1	1	1		
44	3B4–8254B–00	TERMINAL COMP.	1	1	1	1		
45	90464–15195	CLAMP	2	2	2	2		
46	90464–13073	CLAMP	4	4	4	4		
47	437–83936–01	BAND, SWITCH CORD	4	4	4	4		
48	90464–15157	CLAMP	4	4	4	4		
49	90464–20181	CLAMP	2	2	2	2		
50	90465–10098	CLAMP	1	1	1	1		
51	90464–10112	CLAMP	1	1	1	1		
52	5Y9–12491–00	CLAMP 1	2	2	2	2		
53	3B4–859A0–10	POWER STRG. CONT. UNIT ASSY	1	1	1	1		

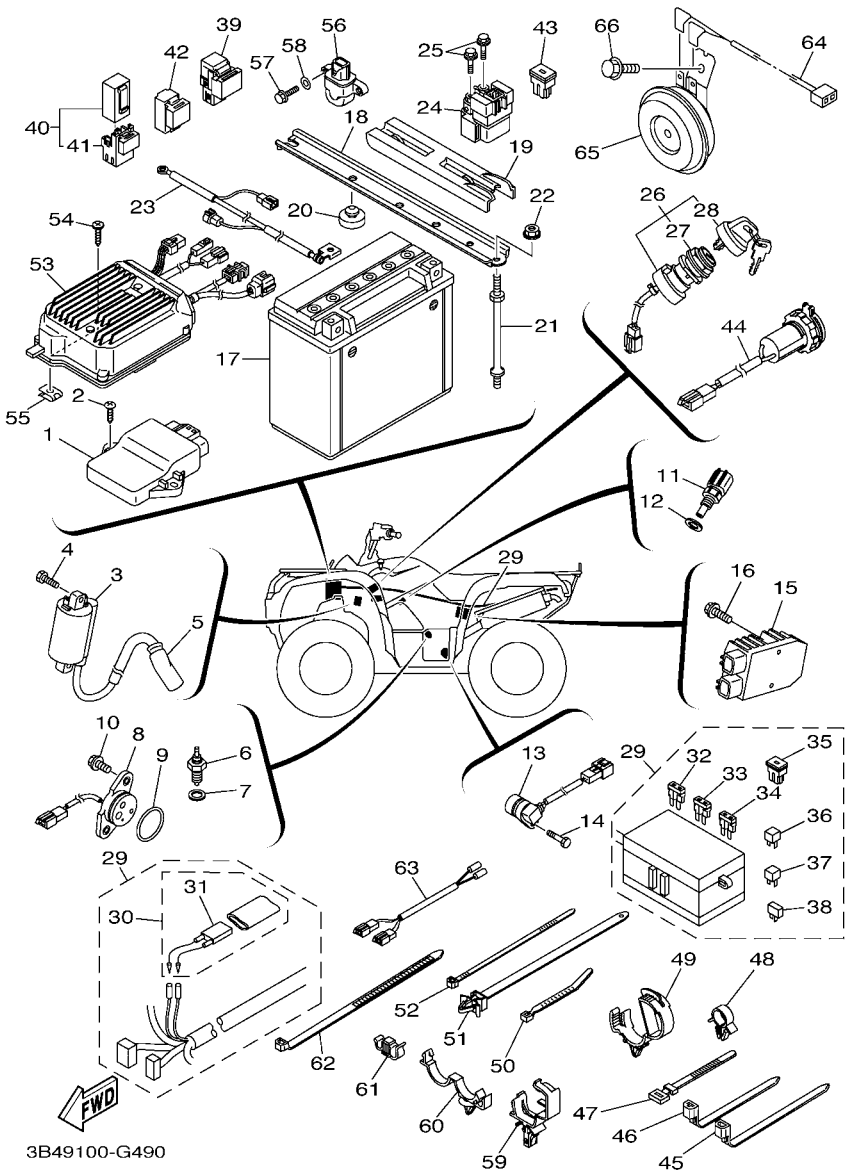

FIG. 49 ELECTRICAL 1

REF. NO.	PART NO.	DESCRIPTION	USA	CAN	EUR	OCE		REMARKS
54	98902–06020	SCREW, BIND	1	1	1	1		
55	90183–06053	NUT, SPRING	1	1	1	1		
56	3B4–82576–00	LEAN ANGLE SENSOR	1	1	1	1		
57	97002–05016	BOLT	2	2	2	2		
58	92902–05600	WASHER, PLATE	2	2	2	2		
59	90464–20237	CLAMP	3	3	3	3		
60	90464–20010	CLAMP	1	1	1	1		
61	90464–09013	CLAMP	2	2	2	2		
62	90464–12045	CLAMP	3	3	3	3		
63	5KM–86171–00	WIRE, LEAD 1		1				
64	3B4–82309–00	WIRE, SUB LEAD			1	1		
65	3B4–83371–00	HORN			1	1		
66	95812–06012	BOLT, FLANGE			1	1		

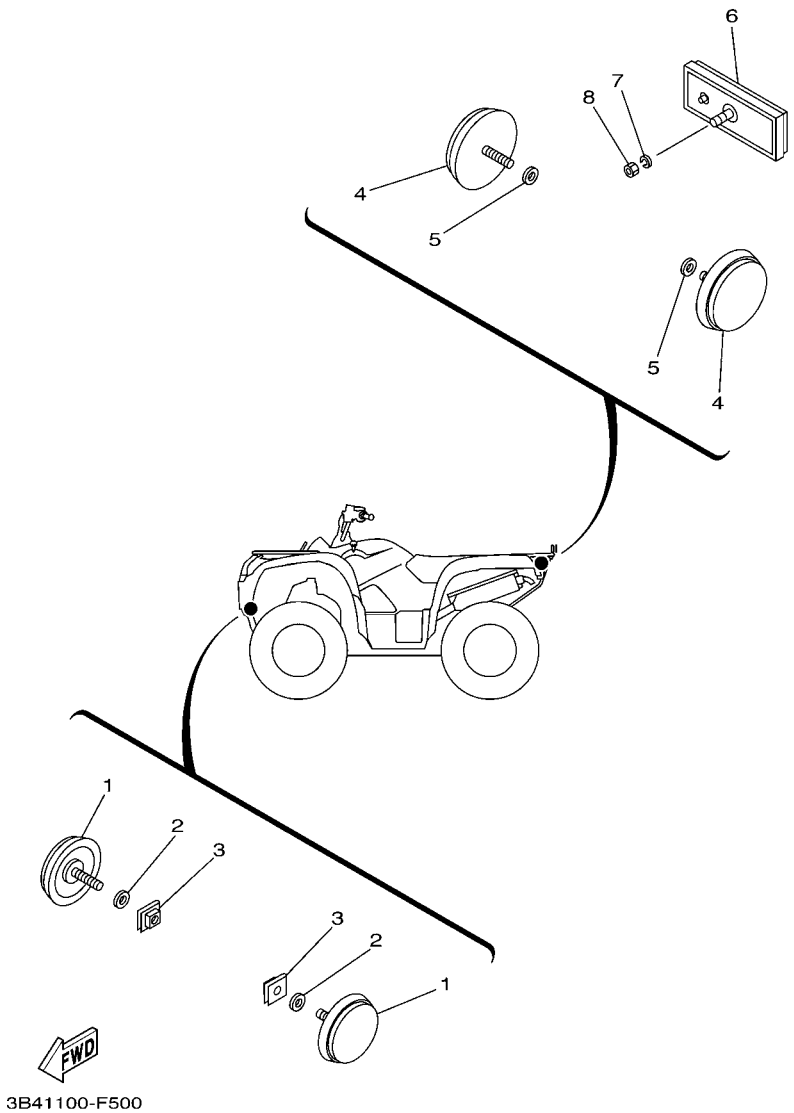

FIG. 50 ELECTRICAL 2

REF. NO.	PART NO.	DESCRIPTION	USA	CAN	EUR	OCE		REMARKS
1	2EK–85111–00	REFLECTOR, FRONT 1		2				
2	92902–05200	WASHER		2				
3	90183–051A0	NUT, SPRING		2				
4	449–85131–02	REFLECTOR, REAR 1		2				
5	92902–05200	WASHER		2				
6	3Y6–85130–02	REAR REFLECTOR ASSY		1	1			
7	92902–05200	WASHER		1	1			
8	95302–05600	NUT		1	1			

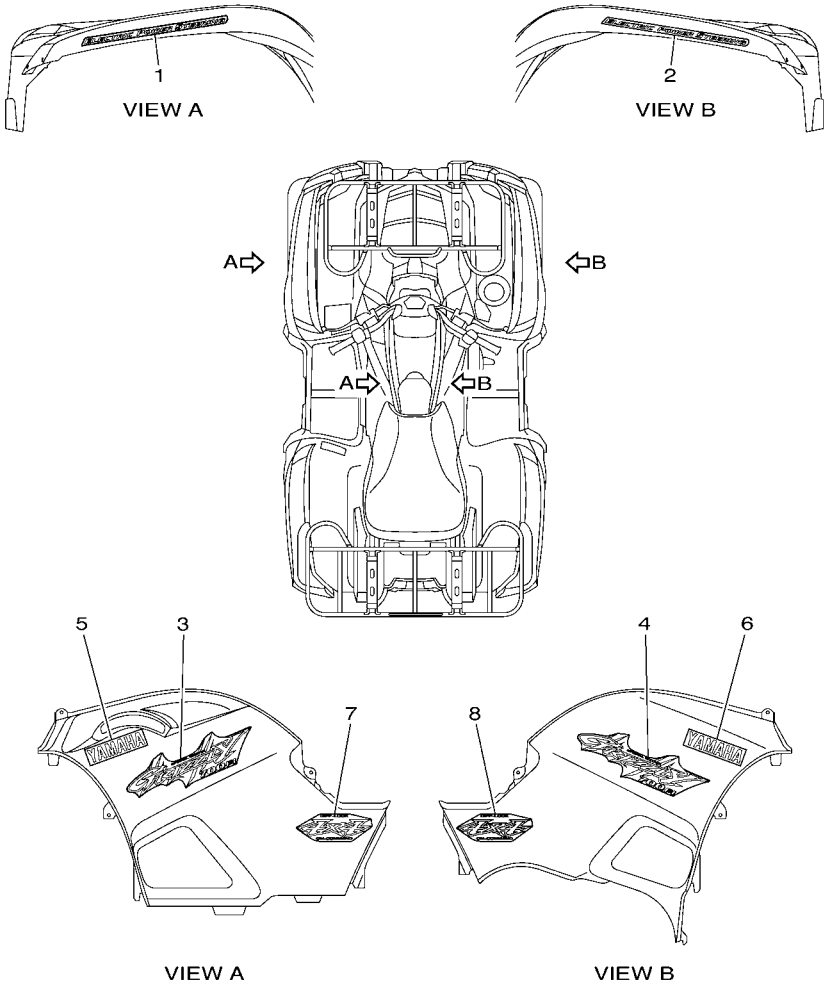

3B4M100-G510

FIG. 51 GRAPHICS

REF. NO.	PART NO.	DESCRIPTION	USA	CAN	EUR	OCE		REMARKS
1	3B4–21578–00	EMBLEM	1	1	1	1		
2	3B4–21578–00	EMBLEM	1	1	1	1		
3	3B4–2173E–60	GRAPHIC 1	1	1	1	1		
4	3B4–2173E–60	GRAPHIC 1	1	1	1	1		
5	5KM–2173B–00	EMBLEM 3D	1	1	1	1		
6	5KM–2173B–00	EMBLEM 3D	1	1	1	1		
7	3B4–2163G–60	EMBLEM 1	1	1	1	1		
8	3B4–2163G–60	EMBLEM 1	1	1	1	1		

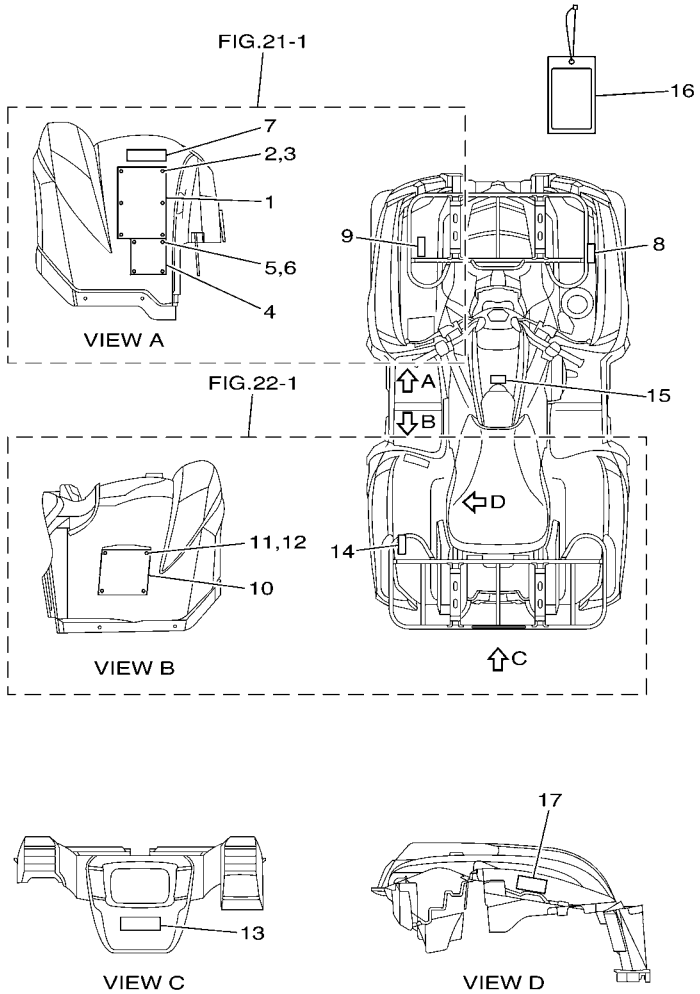

3B41100-F520

FIG. 52 EMBLEM & LABEL 1

REF. NO.	PART NO.	DESCRIPTION	USA	CAN	EUR	OCE		REMARKS
1	5FE–21568–01	LABEL, WARNING	1					ENGLISH
2	90267–32004	RIVET, BLIND	6					
3	90201–03008	WASHER, PLATE	6					
4	5FE–21697–01	LABEL, CAUTION 2	1					ENGLISH
5	90267–32004	RIVET, BLIND	4					
6	90201–03008	WASHER, PLATE	4					
7	5GH–2151E–00	LABEL 2	1					ENGLISH
8	3B4–2151F–00	LABEL 3	1					ENGLISH
9	3B4–24875–00	LABEL 1	1					ENGLISH
10	5KM–21696–00	LABEL, CAUTION	1					ENGLISH
11	90267–32004	RIVET, BLIND	4					
12	90201–03008	WASHER, PLATE	4					
13	5KM–2151K–00	LABEL 7	1					ENGLISH
14	3B4–24875–20	LABEL 1	1					ENGLISH
15	5KM–21558–00	LABEL, WARNING 2	1					ENGLISH
16	3GH–2819R–00	TAG, WARNING	1					
17	3B4–2177C–10	PLATE, EPA OFFROAD ATV 1	1					

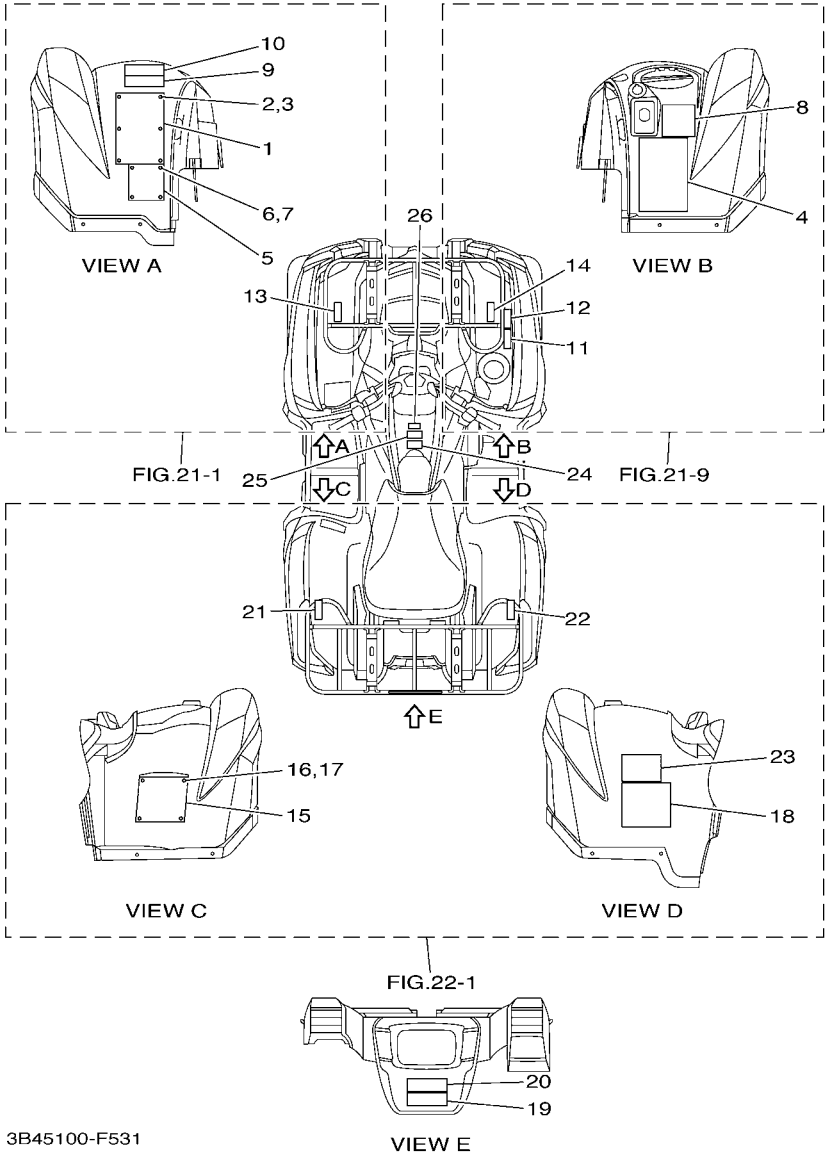

FIG. 53 EMBLEM & LABEL 2

REF. NO.	PART NO.	DESCRIPTION	USA	CAN	EUR	OCE		REMARKS
1	5FE–21568–01	LABEL, WARNING		1				ENGLISH
2	90267–32004	RIVET, BLIND		6				
3	90201–03008	WASHER, PLATE		6				
4	4WU–21568–10	LABEL, WARNING		1				FRENCH
5	5FE–21697–01	LABEL, CAUTION 2		1				ENGLISH
6	90267–32004	RIVET, BLIND		4				
7	90201–03008	WASHER, PLATE		4				
8	3JM–21697–10	LABEL, CAUTION 2		1				FRENCH
9	5GH–2151E–00	LABEL 2		1				ENGLISH
10	5GH–2151E–10	LABEL 2		1				FRENCH
11	3B4–2151F–00	LABEL 3		1				ENGLISH
12	3B4–2151F–10	LABEL 3		1				FRENCH
13	3B4–24875–00	LABEL 1		1				ENGLISH
14	3B4–24875–10	LABEL 1		1				FRENCH
15	5KM–21696–00	LABEL, CAUTION		1				ENGLISH
16	90267–32004	RIVET, BLIND		4				
17	90201–03008	WASHER, PLATE		4				
18	5KM–21696–10	LABEL, CAUTION		1				FRENCH
19	5KM–2151K–00	LABEL 7		1				ENGLISH
20	5KM–2151K–10	LABEL 7		1				FRENCH
21	3B4–24875–20	LABEL 1		1				ENGLISH
22	3B4–24875–30	LABEL 1		1				FRENCH
23	4WU–2151H–10	LABEL 5		1				FRENCH
24	5KM–21558–00	LABEL, WARNING 2		1				ENGLISH
25	5KM–21558–10	LABEL, WARNING 2		1				FRENCH
26	4SH–2416E–00	LABEL, CAUTION CANADA		1				ENGLISH

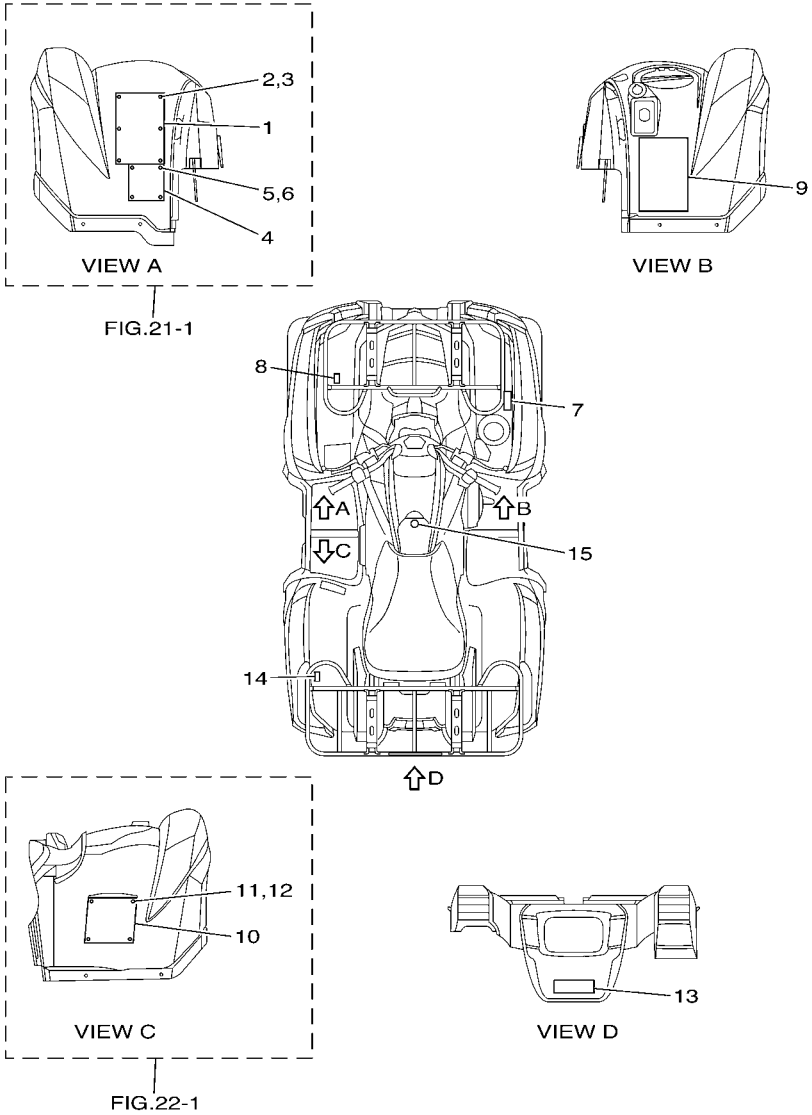

FIG. 54 EMBLEM & LABEL 3

REF. NO.	PART NO.	DESCRIPTION	USA	CAN	EUR	OCE		REMARKS
1	5FK–21568–00	LABEL, WARNING			1			
2	90267–32004	RIVET, BLIND			6			
3	90201–03008	WASHER, PLATE			6			
4	5FK–21697–00	LABEL, CAUTION 2			1			
5	90267–32004	RIVET, BLIND			4			
6	90201–03008	WASHER, PLATE			4			
7	3B4–24877–A0	LABEL, CAUTION			1			ENGLISH
8	3GC–24877–A0	LABEL, CAUTION			1			ENGLISH
9	5KM–21558–20	LABEL, WARNING 2			1			
10	5KM–21696–M0	LABEL, CAUTION			1			
11	90267–32004	RIVET, BLIND			4			
12	90201–03008	WASHER, PLATE			4			
13	5KM–2151K–00	LABEL 7			1			ENGLISH
14	4WV–24877–A0	LABEL, CAUTION			1			ENGLISH
15	3ME–2415E–01	LABEL, CAUTION			1			

FIG. 55 EMBLEM & LABEL 4

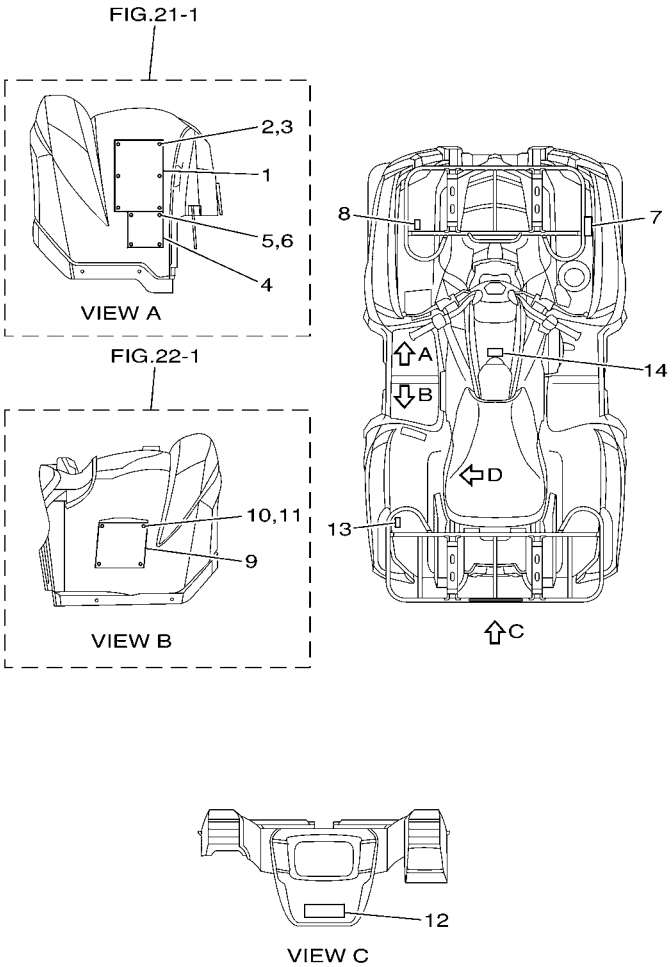

3B43300-F520

REF. NO.	PART NO.	DESCRIPTION	USA	CAN	EUR	OCE		REMARKS
1	5FE–21568–11	LABEL, WARNING				1		ENGLISH
2	90267–32004	RIVET, BLIND				6		
3	90201–03008	WASHER, PLATE				6		
4	5FE–21697–01	LABEL, CAUTION 2				1		ENGLISH
5	90267–32004	RIVET, BLIND				4		
6	90201–03008	WASHER, PLATE				4		
7	3B4–2151F–00	LABEL 3				1		ENGLISH
8	3GC–24877–A0	LABEL, CAUTION				1		ENGLISH
9	5KM–21696–00	LABEL, CAUTION				1		ENGLISH
10	90267–32004	RIVET, BLIND				4		
11	90201–03008	WASHER, PLATE				4		
12	5KM–2151K–00	LABEL 7				1		ENGLISH
13	4WV–24877–A0	LABEL, CAUTION				1		ENGLISH
14	5KM–21558–00	LABEL, WARNING 2				1		ENGLISH

PART NO.	GRID NO.
3B4–11101–00	B – 2
5VK–1111F–00	B – 7
4G0–11133–11	B – 2
3B4–11165–00	B – 2
3B4–11166–01	B – 2
371–11167–01	B – 2
3B4–11181–00	B – 2
3B4–11185–00	B – 2
1S3–11186–00	B – 2
214–11198–01	B – 10
	D – 13
	D – 15
3B4–11311–10	B – 3
1S3–11351–00	B – 3
3B4–11400–00	B – 4
3B4–11401–09	B – 4
3B4–11402–09	B – 4
3B4–11447–00	B – 4
3B4–11454–00	B – 4
3B4–11531–00	B – 4
5KM–11536–10	B – 4
5KM–11565–00	B – 4
1S3–11603–10	B – 4
1S3–11631–10	B – 4
5VK–11633–00	B – 4
1S3–11651–00	B – 4
1S3–11681–00	B – 4
5VK–12111–00	B – 6
5VK–12113–00	B – 6
3YF–12116–00	B – 6
3YF–12117–01	B – 6
4G0–12118–00	B – 6
5H0–12119–00	B – 6
5VK–12121–00	B – 6
5VK–12146–00	B – 6
5VK–12151–00	B – 6
5XT–12159–00	B – 6
5VK–12161–00	B – 6
3B4–12170–01	B – 7
1S3–12176–00	B – 7
3TB–12210–00	B – 7
4DW–12213–00	B – 7
3B4–12221–00	B – 10
3B4–12231–01	B – 7
3B4–12241–00	B – 7
1S3–12280–01	B – 7
5VK–12284–00	B – 7
1S3–12290–00	B – 7

PART NO.	GRID NO.
3B4–12405–00	B – 9
3B4–1240A–10	B – 9
3B4–12411–00	B – 9
1S3–12413–00	B – 9
3B4–12422–00	B – 8
3B4–12428–00	B – 8
11H–12438–10	B – 8
3B4–1243A–00	B – 12
5D3–1243K–00	B – 8
3B4–12450–00	B – 8
22W–12462–00	B – 9
5KM–12469–00	B – 8
3B4–12481–00	B – 8
5Y9–12491–00	G – 8
1AA–12535–00	B – 9
3B4–12576–00	B – 9
3B4–12577–00	B – 8
3B4–12578–00	B – 9
3B4–13160–00	B – 12
3B4–13171–00	B – 10
3B4–13300–00	B – 10
3B4–13329–00	B – 10
3B4–13354–00	B – 4
3B4–13355–00	B – 10
5GH–13440–20	B – 10
25G–13490–00	B – 10
1S3–13493–00	B – 12
3B4–13545–00	B – 12
8FP–13556–00	B – 12
3B4–13586–00	B – 11
3B4–13750–10	B – 12
3B4–13761–00	B – 12
3B4–13907–00	E – 7
3B4–13971–00	E – 7
3B4–13971–10	E – 7
4BH–14134–00	B – 12
5LP–14147–00	B – 12
1UY–14155–00	B – 12
1S3–14161–00	B – 12
8CC–14216–10	B – 12
5JW–14348–00	B – 12
3B4–14402–01	B – 11
3B4–14409–00	B – 11
3B4–14411–10	B – 11
3B4–14413–10	B – 12
3B4–14424–00	B – 11
3B4–14451–00	B – 11
3B4–14453–00	B – 11

PART NO.	GRID NO.
3B4–14455–00	B – 11
3B4–14457–00	B – 11
59V–14457–00	B – 11
3B4–14472–00	B – 11
3B4–14503–00	B – 12
3B4–14611–01	B – 13
3YF–14613–01	B – 14
3B4–14617–00	B – 13
3B4–14627–01	B – 13
3B4–14638–00	B – 13
3B4–14714–10	B – 13
3B4–14718–10	B – 13
3B4–1471C–00	B – 13
3B4–1472C–00	B – 13
3B4–14733–00	B – 14
3B4–14752–00	B – 13
3B4–14755–00	B – 14
3B4–14758–01	B – 13
3B4–14759–00	B – 14
3B4–1477U–00	B – 14
3B4–15100–23	B – 15
3B4–15112–01	B – 15
3B4–15113–00	C – 2
3B4–15163–00	C – 5
3B4–15315–00	C – 2
5KM–15351–00	C – 3
3B4–15362–00	B – 15
5UG–15371–00	D – 13
3B4–15379–00	C – 2
4WV–15381–00	C – 2
11H–15383–02	C – 9
3B4–15388–00	B – 15
3B4–15411–00	C – 2
3B4–15421–00	C – 2
3B4–15431–00	C – 2
3B4–15442–00	C – 2
3B4–15451–00	C – 2
3B4–15453–00	C – 2
3B4–15463–00	C – 5
3B4–15471–00	C – 3
3B4–15472–00	C – 3
3B4–15473–00	C – 3
3B4–15474–00	C – 3
3B4–15515–00	C – 4
3B4–15517–00	C – 4
3B4–15522–00	C – 4
1S3–15560–00	C – 4
5KM–15590–00	C – 4

PART NO.	GRID NO.
3B4–16181–00	B – 4
3B4–16611–00	C – 5
3B4–16620–00	C – 5
4SH–16664–00	C – 5
3B4–17223–10	C – 7
3B4–17233–00	C – 7
3B4–17243–00	C – 7
3B4–17253–00	C – 7
3B4–17285–00	C – 7
3B4–17421–00	C – 7
3B4–17432–00	C – 7
3B4–17473–00	C – 7
3B4–17520–00	C – 8
3B4–17521–00	C – 9
3B4–17530–00	C – 9
3B4–17531–00	C – 9
3B4–17531–10	C – 9
3B4–17531–20	C – 10
3B4–17531–30	C – 10
3B4–17531–40	C – 10
3B4–17531–50	C – 10
5KM–17531–50	C – 9
3B4–17531–60	C – 10
5KM–17531–60	C – 9
5KM–17531–70	C – 9
5KM–17531–80	C – 9
5KM–17531–90	C – 9
5KM–17531–A0	C – 9
5KM–17531–B0	C – 9
3B4–17551–00	C – 9
3B4–1755A–00	C – 10
3B4–17582–00	C – 7
3B4–17606–00	C – 5
3B4–17611–00	C – 5
3B4–17623–00	C – 5
3B4–17632–00	C – 5
4WV–17639–10	C – 5
3B4–17641–00	C – 5
4WV–17644–00	C – 6
3B4–17645–00	C – 5
3B4–17653–00	C – 5
3B4–17660–00	C – 6
4CW–17664–00	C – 6
3B4–17670–00	C – 6
3B4–17681–10	C – 7
4WV–17684–00	C – 6
3B4–17832–00	C – 9
3B4–18103–10	C – 13

PART NO.	GRID NO.
3B4–18104–20	C – 13
3B4–18115–00	C – 13
3B4–18125–00	C – 13
3B4–18146–00	C – 13
3B4–18148–00	C – 11
3B4–18160–00	C – 14
3B4–18169–10	C – 13
5KM–18171–00	C – 11
3B4–18174–01	C – 13
3B4–18190–01	C – 13
5KM–18191–00	C – 13
3B4–18196–00	C – 13
4SH–18198–00	C – 13
3B4–18318–00	C – 11
3B4–18331–00	C – 11
3B4–18380–00	C – 13
3B4–18511–00	C – 11
3B4–18512–00	C – 11
3B4–18531–00	C – 11
3B4–18540–00	C – 11
5KM–18542–00	C – 11
1J7–18547–00	C – 11
4UN–18566–00	C – 11
3B4–18581–00	B – 15
3B4–21110–20	C – 15
3B4–21110–30	C – 15
3B4–2113B–00	C – 15
3B4–2147A–00	C – 15
3B4–2147E–00	C – 15
3B4–2147F–00	C – 15
3B4–21485–00	C – 15
3B4–2151B–00	D – 4
5GH–2151E–00	G – 12
	G – 13
5GH–2151E–10	G – 13
3B4–2151F–00	G – 12
	G – 13
	G – 15
3B4–2151F–10	G – 13
4WU–2151H–10	G – 13
5KM–2151K–00	G – 12
	G – 13
	G – 14
	G – 15
5KM–2151K–10	G – 13
3B4–21523–00	D – 4
3B4–21541–00	D – 3
3B4–21552–00	D – 5

PART NO.	GRID NO.
3B4–21553–00	D – 5
3B4–21556–E0	D – 3
5KM–21558–00	G – 12
	G – 13
	G – 15
5KM–21558–10	G – 13
5KM–21558–20	G – 14
5FK–21568–00	G – 14
5FE–21568–01	G – 12
	G – 13
4WU–21568–10	G – 13
5FE–21568–11	G – 15
3B4–21575–10	D – 5
3B4–21578–00	G – 11
3B4–215A1–00	D – 4
3B4–2160E–00	D – 6
3B4–2160F–00	D – 6
3B4–2163G–60	G – 11
3B4–21651–00	D – 6
3B4–21652–00	D – 6
3B4–21669–00	D – 6
5KM–21696–00	G – 12
	G – 13
	G – 15
5KM–21696–10	G – 13
5KM–21696–M0	G – 14
5FK–21697–00	G – 14
5FE–21697–01	G – 12
	G – 13
	G – 15
3JM–21697–10	G – 13
3B4–21711–E0	D – 7
3B4–21717–00	D – 7
3B4–2171A–00	D – 7
3B4–21721–E0	D – 7
3B4–21732–00	F – 13
3B4–21735–00	F – 13
5KM–2173B–00	G – 11
3B4–2173E–60	G – 11
3B4–2173M–00	D – 7
3B4–2173N–00	D – 7
3B4–21747–00	D – 7
3B4–2174A–00	D – 7
3B4–2174T–00	D – 7
3B4–2174Y–00	D – 7
5KM–2175B–00	D – 5
3B4–2176E–00	D – 7
3B4–2177B–00	D – 7

PART NO.	GRID NO.
3B4–2177C–10	G – 12
3B4–2177K–00	D – 7
3B4–2177N–00	D – 7
3B4–21871–00	D – 7
1S3–21875–00	D – 7
3B4–22128–00	D – 9
3B4–22129–00	D – 9
5KM–22149–10	D – 9
	E – 5
3B4–22171–00	D – 9
3B4–22171–11	D – 9
3B4–22172–00	D – 9
3B4–22172–11	D – 9
3B4–2217M–00	D – 9
3B4–2217M–11	D – 9
3B4–2217N–00	D – 9
3B4–2217N–11	D – 9
3B4–22210–01	D – 11
3B4–22517–00	E – 3
3B4–23123–00	E – 6
3B4–23133–00	E – 6
3B4–23350–01	E – 5
3B4–23391–00	D – 5
5KM–23448–00	F – 2
	F – 4
3B4–23501–00	E – 10
3B4–23502–00	E – 12
2NL–23517–00	F – 2
	F – 4
5KM–23526–10	D – 9
	E – 5
3B4–23540–00	E – 5
3B4–23540–11	E – 5
3B4–23550–00	E – 5
3B4–23550–11	E – 5
3B4–23570–00	E – 5
3B4–23570–11	E – 5
3B4–23579–00	E – 10
	E – 12
5LP–23579–00	E – 5
3B4–23580–00	E – 5
3B4–23580–11	E – 5
1UY–23812–00	E – 3
3B4–23813–00	E – 3
8K1–23814–00	E – 3
3B4–23816–00	E – 3
3B4–2381B–00	E – 3
5KM–23831–00	E – 4

PART NO.	GRID NO.
1UY–23841–01	E – 4
1UY–23845–01	E – 4
5KM–2385L–01	D – 11
5KM–2385M–01	D – 11
5GH–23868–00	E – 3
3B4–2386G–00	D – 11
3B4–2386H–00	D – 11
3B4–23875–00	E – 3
1UY–23894–01	E – 3
3B4–238B0–10	E – 3
3B4–238B6–00	E – 3
3B4–24110–00	E – 7
3B4–24110–10	E – 7
3B4–24129–00	E – 7
3B4–24141–00	E – 8
3B4–2414F–00	E – 7
3B4–2414H–00	D – 8
3B4–2414J–00	E – 7
3B4–2414K–00	E – 7
3ME–2415E–01	G – 14
4SH–2416E–00	G – 13
3B4–2416G–00	E – 8
3B4–24181–00	E – 8
3B4–24182–00	E – 8
3B4–24312–00	E – 7
3B4–24313–00	E – 7
3B4–24380–10	E – 7
3B4–24398–00	E – 7
1S3–24486–00	E – 7
3B4–24491–00	E – 7
3B4–24610–00	E – 7
3B4–2470F–00	E – 9
3B4–2470F–30	E – 9
3B4–24710–01	E – 9
3B4–24710–31	E – 9
3B4–24725–00	E – 9
22W–24741–00	E – 9
	G – 7
5RU–24768–00	D – 4
3B4–24821–00	F – 14
3B4–24822–00	F – 14
3B4–2482J–01	F – 14
3B4–2482K–01	F – 14
3B4–24841–00	F – 14
3B4–24842–00	F – 14
3B4–24842–10	F – 14
3B4–24875–00	G – 12
	G – 13

PART NO.	GRID NO.
3B4–24875–10	G – 13
3B4–24875–20	G – 12
	G – 13
3B4–24875–30	G – 13
3B4–24877–A0	G – 14
3GC–24877–A0	G – 14
	G – 15
4WV–24877–A0	G – 14
	G – 15
3B4–2510F–00	E – 10
	E – 12
	F – 2
	F – 4
3B4–2510G–00	E – 10
	E – 12
	F – 2
	F – 4
3B4–2510H–00	E – 10
	E – 12
	F – 2
	F – 4
3B4–2510J–00	E – 10
	E – 12
3B4–25111–10	E – 10
	E – 12
	F – 2
	F – 4
3B4–2511G–00	E – 10
	E – 12
	F – 3
	F – 5
3B4–2511H–00	E – 10
	E – 12
	F – 3
	F – 5
3B4–2512G–00	E – 10
	E – 12
	F – 3
	F – 5
3B4–2512H–00	E – 10
	E – 12
	F – 3
	F – 5
3B4–2512J–00	E – 10
	E – 12
	F – 3
	F – 5
3B4–2514A–00	E – 10

PART NO.	GRID NO.
3B4–2514A–00	F – 2
3B4–2515A–00	E – 12
	F – 4
3B4–25180–B0	E – 10
	E – 12
3B4–25182–00	E – 10
	E – 12
	F – 3
	F – 5
3B4–2518E–00	E – 10
	E – 12
3B4–2518E–10	F – 2
	F – 4
3B4–2530B–00	E – 11
	E – 13
	F – 3
	F – 5
3B4–2530F–00	F – 2
3B4–2530V–00	F – 2
	F – 4
3B4–2532F–00	F – 4
3B4–2536E–00	F – 3
	F – 5
3B4–25390–B0	F – 2
	F – 4
3B4–2539F–00	F – 2
3B4–2539G–00	F – 4
3B4–25715–00	F – 11
3B4–2580T–01	E – 14
3B4–2580U–01	E – 14
3B4–2580V–01	F – 6
3B4–2580W–01	F – 6
3B4–2582T–01	E – 14
3B4–2582V–00	F – 6
3B4–2583T–00	F – 10
3B4–2583V–00	F – 11
3GM–25852–22	F – 10
	F – 11
4TT–25854–00	F – 10
	F – 11
3B4–2585B–00	F – 10
	F – 11
2GU–25866–00	F – 10
	F – 11
56A–25867–00	F – 10
	F – 11
3B4–25871–10	F – 10
3B4–25872–10	F – 10

PART NO.	GRID NO.
3B4–25872–10	F – 11
3B4–25873–10	F – 10
3B4–25874–10	F – 11
3B4–25875–00	D – 10
3B4–25876–10	F – 10
3B4–25882–10	F – 11
3B4–25886–00	F – 10
3B4–2588F–00	F – 11
3B4–2589F–00	F – 10
3B4–2589F–10	F – 11
5DH–25916–00	F – 6
3JD–25917–00	E – 14
	F – 6
5DH–25919–00	E – 14
5DH–25919–50	F – 6
3JD–25926–00	E – 14
	F – 6
8CR–25926–00	E – 14
1UY–25926–51	E – 14
	F – 6
3GD–25933–00	F – 6
5DH–25933–00	E – 14
1UY–25937–51	E – 14
	F – 6
1UY–25938–51	E – 14
	F – 6
3JD–25961–00	E – 14
	F – 6
3B4–26111–20	F – 8
3B4–26124–00	F – 8
1NV–26129–00	F – 8
3B4–26232–00	D – 5
5LP–26241–00	F – 8
5KM–26250–20	F – 8
1NV–2625G–01	F – 8
1NV–2625K–00	F – 8
4KB–2628F–10	F – 8
4KB–2628G–00	F – 8
3B4–26294–00	F – 11
1NV–26304–00	F – 8
3B4–26311–10	F – 8
5EB–26332–00	F – 10
	F – 11
3B4–26341–00	F – 8
3B4–26347–00	F – 8
3B4–26372–00	F – 11
3B4–2637A–01	F – 10
3B4–2637F–10	F – 8

PART NO.	GRID NO.
1NV–26398–00	F – 8
3B4–27211–00	F – 12
5KM–27414–01	B – 13
5GH–2741A–10	F – 13
3B4–27452–00	F – 13
3B4–27453–01	F – 13
3B4–27462–00	F – 13
3B4–27463–01	F – 13
5TG–28100–00	C – 15
1NV–2811A–01	C – 15
3GH–2819R–00	G – 12
3B4–28217–00	D – 4
3B4–28227–00	D – 4
3B4–28237–00	D – 4
3B4–28239–00	F – 13
3B4–28247–00	D – 4
3B4–28307–00	D – 4
3B4–28309–00	D – 4
3B4–28313–00	D – 5
3B4–28332–00	D – 4
3B4–28349–00	D – 4
3B4–2837L–00	D – 5
3B4–2837N–00	D – 4
3B4–2837R–00	D – 4
3B4–2838K–00	D – 3
3B4–2838M–00	D – 3
3B4–2839N–00	D – 3
3B4–2842M–00	F – 14
3B4–2842M–10	F – 14
3B4–2842N–00	F – 14
3B4–2842N–10	F – 14
3B4–2845L–00	D – 4
3B4–2845N–00	F – 14
3B4–28487–00	D – 4
3B4–28488–00	C – 15
3B4–28488–10	C – 15
3B4–46101–01	D – 12
3B4–46117–00	D – 15
3B4–46117–10	D – 15
3B4–46117–20	D – 15
3B4–46117–30	D – 15
3B4–46119–00	D – 12
3B4–46119–10	D – 12
3B4–46119–20	D – 12
3B4–46119–30	D – 12
3B4–46119–40	D – 12
3B4–46119–50	D – 12
3B4–46126–00	D – 12

PART NO.	GRID NO.
5KM–46126–00	D – 14
	E – 2
2HR–46127–00–25	D – 12
2HR–46127–00–30	D – 12
2HR–46127–00–35	D – 12
2HR–46127–00–40	D – 12
2HR–46127–00–45	D – 12
2HR–46127–00–50	D – 12
3B4–46129–00	D – 12
3B4–46134–00	D – 15
3B4–46135–00	D – 15
5KM–46136–00	D – 14
	E – 2
5KM–46137–00	D – 14
	E – 2
3B4–46141–00	D – 15
3B4–46142–00	D – 15
3B4–46144–00	D – 12
4WV–46145–10	D – 15
3B4–46151–00	D – 12
3B4–46152–00	D – 13
3B4–46160–00	D – 15
3B4–46161–00	D – 15
3B4–46162–00	D – 15
3B4–46163–00	D – 15
3B4–46164–00	D – 15
3B4–46166–00	D – 15
3B4–4616A–00	D – 15
3B4–46172–00	D – 14
3B4–46173–00	E – 2
3B4–461A0–00	D – 12
3B4–4621F–00	D – 13
3B4–4621F–10	D – 13
3B4–4621F–20	D – 13
3B4–4621F–30	D – 13
3B4–46316–00	D – 12
3B4–4631A–01	D – 13
3B4–46326–00	D – 13
3B4–46344–00	D – 13
3B4–46344–10	D – 13
3B4–46344–20	D – 13
3B4–46344–30	D – 13
3B4–46344–40	D – 13
3B4–46344–50	D – 14
3B4–46470–00	D – 15
5KM–46559–00	D – 14
	E – 2
3B4–47359–00	D – 15

PART NO.	GRID NO.
3B4–47491–00	D – 11
3B4–67839–00	D – 15
3B4–81410–00	F – 15
3B4–81450–00	F – 15
5KM–81677–00	F – 11
3AJ–81801–00	G – 2
3KS–81809–00	G – 2
3B4–81815–00	G – 2
3AJ–81826–00	G – 2
4XV–8182A–00	G – 2
11H–81844–00	G – 2
1FK–81847–00	G – 2
4NK–81850–00	G – 2
4G0–81871–00	G – 2
1S3–81890–00	G – 2
3B4–81940–00	G – 7
5DM–81950–00	G – 8
5EA–81950–20	G – 8
29U–81950–93	G – 8
5EA–81952–00	G – 8
1D7–81960–00	G – 7
4WA–81980–00	G – 8
5TJ–81980–00	G – 8
5VG–81980–00	G – 8
4SH–82100–22	G – 7
3B4–82116–10	G – 7
3B4–82122–00	D – 5
1S3–82123–00	C – 3
3B4–82128–00	G – 7
3B4–82129–00	G – 7
3B4–82133–10	G – 7
5PS–82151–00	G – 8
5JJ–82151–10	G – 8
5JJ–82151–30	G – 8
5JJ–82151–90	G – 8
4GB–82180–00	G – 8
3B4–82309–00	G – 9
1D7–82310–00	G – 7
3B4–8233W–10	D – 4
5VK–82370–00	G – 7
1C7–82380–00	B – 12
3B4–82510–00	G – 7
3B4–8253E–10	D – 4
3B4–8253F–10	D – 4
3B4–82540–01	G – 7
3GB–82540–01	G – 7
3B4–8254B–00	G – 8
3B4–8254E–10	D – 4

PART NO.	GRID NO.
4GB–82560–00	G – 8
3HN–82569–00	G – 7
3B4–82576–00	G – 9
3HN–82579–00	G – 8
3B4–82590–20	G – 8
3B4–82590–30	G – 8
4V4–82913–00	F – 8
3B4–83371–00	G – 9
3B4–83500–01	G – 3
3B4–83500–11	G – 3
3B4–83755–00	G – 7
3B4–83912–00	F – 11
3B4–83922–00	F – 10
437–83936–01	G – 8
3B4–83972–00	F – 9
3B4–83976–00	F – 9
5KM–83976–20	F – 8
3B4–83980–00	F – 11
4HM–83980–00	F – 10
3B4–84300–00	G – 4
3B4–84314–00	G – 4
2GU–84334–00	G – 4
3B4–84340–00	G – 4
5GH–84703–10	G – 4
3FA–84710–00	G – 5
	G – 6
1A2–84714–41	G – 5
	G – 6
3B4–84751–00	G – 6
2EK–85111–00	G – 10
3Y6–85130–02	G – 10
449–85131–02	G – 10
8CC–85790–01	G – 7
5FL–85885–02	B – 12
8FP–85886–00	B – 11
3B4–8591A–10	G – 7
3B4–859A0–10	G – 8
5KM–86171–00	G – 9
5D3–W0041–00	F – 10
5LP–W0041–00	F – 11
3B4–W0045–00	E – 14
3B4–W0045–10	E – 15
3B4–W0046–00	F – 6
3B4–W0046–10	F – 7
3B4–W0047–00	E – 14
	F – 6
1UY–W0048–50	E – 14
	F – 6

PART NO.	GRID NO.
3B4–W0057–00	E – 14
3B4–W0057–10	F – 6
3B4–W1471–10	B – 13
3B4–W2151–E0	D – 3
3B4–W215B–E0	D – 3
3B4–W215C–E0	D – 3
3B4–W215D–E0	D – 3
3B4–W215E–E0	D – 3
3B4–W2161–E0	D – 6
3B4–W216B–E0	D – 6
3B4–W216C–E0	D – 6
3B4–W216E–E0	D – 6
90105–06078	B – 7
90105–06082	B – 7
	B – 10
	B – 15
90105–06639	C – 15
90105–07004	B – 7
90105–08153	E – 3
90105–08161	E – 14
	F – 6
90105–10131	D – 11
	E – 5
90105–10185	F – 2
	F – 4
90105–10204	E – 3
90105–10219	C – 15
90105–10222	D – 9
	E – 5
90105–10237	C – 15
90105–10238	C – 15
90105–14003	C – 11
90109–06172	C – 14
	D – 3
	D – 10
	E – 3
	E – 7
	F – 11
	F – 13
90109–06202	C – 15
90109–06214	C – 15
	F – 13
90109–08101	E – 14
	F – 6
90109–09002	B – 2
90109–09003	B – 2
90109–09005	B – 2
90109–14002	C – 11

PART NO.	GRID NO.
90110–05031	C – 2
	F – 15
90110–06200	D – 9
	E – 6
	F – 13
90110–08091	C – 9
90111–06086	F – 13
90114–10014	E – 10
	E – 12
	F – 2
	F – 4
90119–06137	G – 7
90119–06152	D – 4
	D – 6
	D – 7
	F – 14
90119–08106	E – 3
90119–08118	F – 14
90119–10023	B – 3
90119–10044	F – 13
	F – 14
90149–04278	F – 8
90149–05016	C – 11
90149–08013	C – 9
90149–08018	C – 4
90154–05021	G – 4
90154–06014	E – 10
	E – 12
	F – 2
	F – 4
90157–04006	C – 5
90159–05044	G – 4
90170–06128	B – 6
90170–08358	C – 13
90170–10010	E – 4
90170–18003	B – 4
90170–36279	C – 6
90171–10001	E – 4
	E – 5
90171–12001	E – 5
90179–05523	D – 3
90179–08029	B – 14
90179–10016	E – 10
	E – 12
	F – 2
	F – 4
90179–12005	D – 12
90179–16004	B – 4

PART NO.	GRID NO.
90179–16005	C – 6
90179–16006	C – 9
90179–20016	E – 10
	E – 12
	F – 3
	F – 5
90179–22013	C – 9
90179–22021	C – 5
90179–55660	C – 10
90179–60001	C – 9
90183–05008	D – 5
	G – 4
90183–051A0	G – 10
90183–06053	D – 3
	D – 6
	D – 7
	G – 9
90183–060A2	B – 13
90183–060A5	C – 3
90183–080A1	C – 13
90185–10011	C – 15
90185–10012	D – 9
	D – 11
	E – 5
	F – 2
	F – 4
90185–22008	E – 3
90201–03008	G – 12
	G – 13
	G – 14
	G – 15
90201–04027	F – 2
	F – 4
90201–047R9	C – 5
90201–05015	B – 13
90201–05019	B – 13
90201–05039	G – 3
90201–06019	B – 13
90201–06033	F – 13
90201–06036	B – 13
	C – 13
90201–06078	F – 13
90201–06081	B – 13
90201–06097	G – 5
	G – 6
90201–08048	E – 3
90201–08087	D – 13
90201–10035	C – 15

PART NO.	GRID NO.
90201–10035	D – 11
	F – 2
	F – 4
90201–10118	F – 10
	F – 11
90201–12029	D – 12
90201–127J6	C – 11
90201–132G5	C – 13
90201–14023	F – 12
90201–150U6	C – 7
90201–16021	C – 9
	E – 3
90201–165H4	B – 4
90201–170U8	C – 7
90201–190T7	C – 6
90201–20028	C – 7
90201–20792	C – 11
90201–25290	C – 7
90201–25634	D – 12
90201–286K9	C – 4
90209–06012	B – 9
90209–10229	E – 4
90214–22007	C – 7
90215–10008	B – 10
90215–18001	B – 4
90240–06076	F – 9
90240–08013	F – 11
90267–32004	G – 12
	G – 13
	G – 14
	G – 15
90267–47187	F – 2
	F – 4
90269–05055	C – 14
90269–06081	D – 7
90269–07010	D – 4
	D – 6
	D – 8
90269–07012	D – 3
90269–07076	D – 7
90269–07077	D – 3
90280–05001	B – 4
90282–05007	B – 4
90338–08174	B – 11
90338–08226	D – 5
90338–09130	D – 6
90338–18122	F – 14
90340–10001	D – 15

PART NO.	GRID NO.
90340–14002	D – 13
90340–14011	C – 2
90340–14029	D – 13
	D – 15
90340–14132	B – 10
90340–36002	C – 2
90380–10002	C – 4
90381–17067	F – 2
	F – 4
90387–06113	B – 9
90387–0613B	C – 13
90387–065G1	G – 6
90387–066J1	E – 7
90387–07021	E – 7
90387–090R0	E – 3
90387–20021	C – 7
90387–22014	E – 3
90387–22591	E – 3
90387–250R3	C – 7
90387–26001	C – 7
90401–08004	B – 2
90401–10015	F – 10
	F – 11
90401–10024	B – 10
90401–14118	B – 10
90401–20003	B – 10
90430–06014	B – 8
	B – 9
90430–08119	B – 2
90430–10003	D – 15
90430–10148	G – 7
90430–10188	B – 10
90430–12202	G – 7
90430–14043	B – 10
	C – 11
90430–14194	C – 11
90445–070F1	E – 2
	E – 3
90445–07340	B – 8
90445–074F6	D – 14
90445–09110	D – 7
90445–09117	D – 7
90445–09220	G – 5
	G – 6
90445–12006	B – 12
90450–32015	B – 8
90450–59006	B – 11
90450–72004	B – 11

PART NO.	GRID NO.
90450–99010	B – 13
90460–85135	C – 3
90461–08004	C – 2
90462–08049	B – 15
90462–08055	C – 3
90462–16003	B – 15
90464–06007	B – 12
90464–09013	G – 9
90464–10112	G – 8
90464–12045	G – 9
90464–13073	G – 8
90464–14004	E – 7
90464–15157	G – 8
90464–15195	G – 8
90464–16006	F – 11
90464–16012	D – 8
90464–20010	F – 10
	G – 9
90464–20181	G – 8
90464–20237	G – 9
90464–35132	C – 15
90465–10098	G – 8
90467–07029	D – 14
	E – 2
	E – 3
90467–07093	B – 8
90467–08003	D – 7
90467–09006	E – 7
90467–10041	B – 11
90467–110A2	B – 12
90467–140A4	B – 2
	B – 12
90467–150A2	B – 2
90467–220A1	B – 11
90467–26189	B – 9
90468–18195	E – 4
90480–01400	E – 7
90480–01558	D – 7
90480–13004	D – 3
90480–13018	C – 2
90480–13398	C – 3
	D – 3
90480–13567	C – 3
	D – 5
90480–14532	F – 13
90480–15235	B – 9
90480–17001	B – 13
90480–18290	E – 7

PART NO.	GRID NO.
90501–05764	G – 4
90501–06022	C – 11
90501–08665	F – 9
90501–10353	C – 11
90501–12004	C – 12
90501–140A2	C – 11
90501–18002	D – 14
	E – 2
90501–220A1	B – 4
90501–650A0	C – 6
90506–16318	F – 12
90506–30006	B – 13
90508–32018	C – 11
90508–35764	C – 13
91312–04006	B – 12
91312–06012	B – 8
	B – 10
	B – 15
91312–06020	B – 8
	G – 7
91312–06025	B – 7
91312–06030	B – 2
91312–06040	B – 3
91312–08040	B – 15
91401–16012	F – 8
91401–20012	F – 9
91401–20020	E – 4
	E – 5
91490–25020	E – 5
91A20–07020	B – 11
92012–06012	B – 13
92012–06014	B – 13
92012–06020	B – 13
92012–06030	F – 15
	G – 6
92902–05200	F – 14
	G – 10
92902–05600	D – 3
	F – 8
	G – 9
92902–06200	B – 13
92902–06600	G – 6
92902–08600	C – 9
	D – 13
	F – 11
92907–04600	F – 8
92907–06200	F – 9
92907–06600	B – 9

PART NO.	GRID NO.
93101–10090	B – 8
93101–12168	C – 2
93101–35001	C – 5
93102–15212	C – 13
93102–30010	C – 9
93102–35004	C – 5
93102–35009	D – 12
93102–42004	C – 7
93104–09025	F – 8
93104–41119	C – 6
93105–46001	D – 15
93112–31011	E – 3
93210–10096	B – 10
93210–14369	C – 2
93210–21190	B – 8
93210–21631	B – 15
93210–26001	C – 7
93210–29196	G – 7
93210–33786	B – 8
93210–357A3	C – 2
93210–41042	B – 9
93210–44545	C – 6
93210–626A7	D – 12
93210–78544	B – 2
	C – 9
93210–96601	B – 2
93211–594A4	C – 5
93305–00602	E – 10
	E – 12
	F – 2
	F – 4
93306–00006	B – 8
93306–00426	C – 7
93306–00613	D – 15
93306–00704	D – 13
93306–07209	B – 7
93306–07801	C – 7
93306–20120	C – 2
93306–20309	C – 7
93306–20464	C – 7
93306–205U0	D – 12
93306–20654	C – 9
93306–207U0	D – 13
93306–30438	B – 5
	C – 8
93306–30523	D – 13
93306–30534	B – 5
93306–30537	C – 9

PART NO.	GRID NO.
93306–30810	B – 4
93306–37206	C – 9
93310–32590	C – 7
93310–84017	B – 4
93315–21813	C – 5
93316–01003	C – 5
93332–00046	D – 12
93332–00053	D – 12
93410–20038	C – 11
93410–22039	D – 14
	E – 2
93410–46079	C – 5
93440–15012	C – 8
93440–25084	C – 7
93450–22119	E – 10
	E – 12
93450–24062	C – 5
93450–24154	B – 4
93503–08007	C – 11
93604–10011	B – 8
93604–18100	C – 11
93606–09002	B – 4
93612–16254	B – 2
93700–06004	F – 2
	F – 4
93900–00030	E – 10
	E – 12
	F – 2
	F – 4
94108–12008	E – 10
	E – 12
94108–12012	E – 10
	E – 12
94110–12008	F – 2
	F – 4
94110–12012	F – 2
	F – 4
94580–31074	B – 10
94591–57126	B – 7
94701–00420	B – 2
95022–06008	B – 13
	G – 7
95022–06010	B – 8
	B – 9
95022–06012	B – 2
95022–06016	C – 2
95022–06020	B – 2
	B – 9

PART NO.	GRID NO.
95022–06020	C – 13
95022–06030	B – 8
	B – 15
	C – 2
	C – 5
	G – 2
95022–06040	B – 10
	C – 5
95022–06045	B – 9
95022–06050	B – 8
	C – 2
95022–06060	B – 15
95022–08012	D – 13
95302–05600	G – 10
95302–05800	G – 3
95302–06800	E – 7
	G – 6
95302–08700	C – 13
95302–10700	E – 4
95307–05700	F – 8
95312–06600	F – 12
	F – 13
95312–10600	B – 10
95602–10200	C – 15
	D – 11
95604–06100	F – 10
95607–05100	F – 8
95612–08625	B – 2
95612–16100	E – 4
95702–06300	D – 9
	E – 6
	F – 13
	G – 5
	G – 6
95702–06500	G – 7
95702–08500	B – 14
95802–06012	D – 2
	D – 4
	F – 10
95802–06020	B – 9
	G – 7
95802–06030	E – 7
95812–06012	G – 9
95812–06014	D – 15
95812–06016	C – 13
95812–06035	C – 13
95812–08014	D – 11
	F – 14

PART NO.	GRID NO.
95812–08040	B – 14
	D – 15
95812–10035	C – 15
95822–06020	C – 3
95822–06025	F – 10
	F – 11
95822–06030	C – 2
95822–06040	C – 2
95822–08012	B – 14
95822–08030	E – 3
97002–05016	G – 9
97002–06012	B – 12
97002–06016	G – 7
97017–06010	B – 9
97022–06014	F – 12
97022–08025	D – 13
97022–08030	C – 9
97022–08035	D – 13
97022–08060	E – 3
97702–50512	D – 4
97702–50516	F – 14
97702–50520	B – 11
97702–60025	G – 7
98502–03530	G – 4
98502–05016	D – 3
98502–05020	F – 8
98502–06016	B – 13
98507–04016	F – 8
98507–05012	B – 12
98507–05020	F – 8
98507–06010	B – 12
98507–06012	B – 12
98706–04012	F – 10
	F – 11
98902–06020	G – 9
99001–10600	F – 12
99009–10400	B – 8
99009–12400	C – 11
99009–19400	D – 14
	E – 2
99009–30400	E – 5
	E – 10
	E – 12
99009–35400	B – 4
99009–55500	E – 10
	E – 12
	F – 2
	F – 4

PART NO.	GRID NO.
99009–80500	C – 5
99530–08012	C – 13
99530–10014	D – 13
99530–10116	B – 15
	C – 2
	C – 5
99530–14016	B – 15

PART NO.	GRID NO.

PART NO.	GRID NO.

PART NO.	GRID NO.